SAMSUNG CONFIDENTIAL
THIS DOCUMENT CONTAINS CONFIDENTIAL
PROPRIETARY INFORMATION THAT IS
SAMSUNG ELECTRONICS CO'S PROPERTY.
DO NOT DISCLOSE TO OR DUPLICATE FOR OTHERS
EXCEPT AS AUTHORIZED BY SAMSUNG.

Z3_Master_Rev05

2019.12.02.

sheet01 : RF
sheet02 : UFS, SIM, T-FLASH
sheet03 : BT/WIFI, SENSOR HUB, AUDIO
sheet04 : AP
sheet05 : AP PWR
sheet06 : AP MAIN PMIC, AP SLAVE PMIC, IF PMIC, DC
sheet07 : CAMERA (1/2)
sheet08 : CAMERA (2/2)
sheet09 : CP, CP PMIC
sheet10 : MMW, Shieldcan
sheet11 : L_INTERPOSER PIN
sheet12 : R_INTERPOSER PIN

SAMSUNG CONFIDENTIAL
THIS DOCUMENT CONTAINS CONFIDENTIAL
AND/OR PROPRIETARY INFORMATION THAT IS
THE PROPERTY OF SAMSUNG ELECTRONICS CO., LTD.
DO NOT DISCLOSE THIS DOCUMENT TO OTHER OWNERS
EXCEPT AS AUTHORIZED BY SAMSUNG.

MASTER PCB

RF - SUB ANT

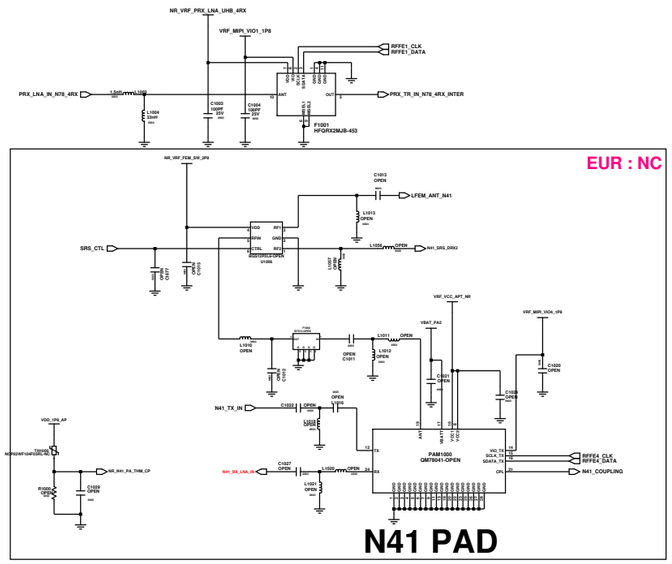

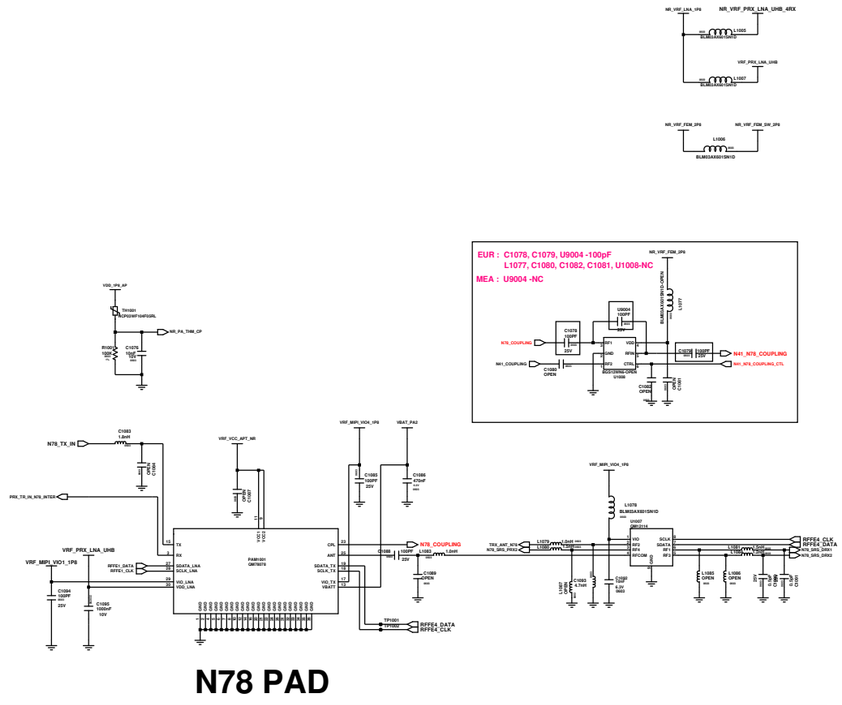

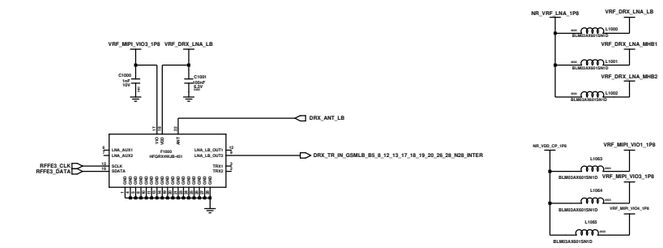

LB LFEM(SUB1_LB)
(GSMLB,B5/8/12/13/17/18/19/20/26/28,N8/28)

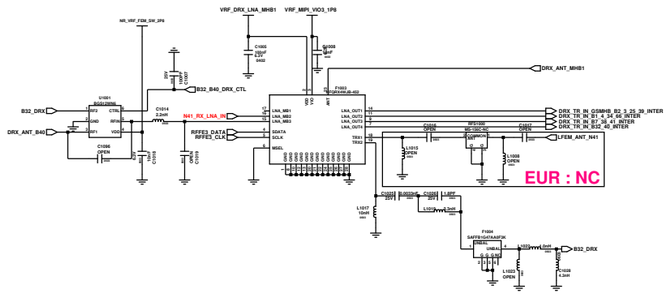

MHB LFEM(SUB2_MHB1)
(B32/B39/40, B1/3/7/38/41 4RX)

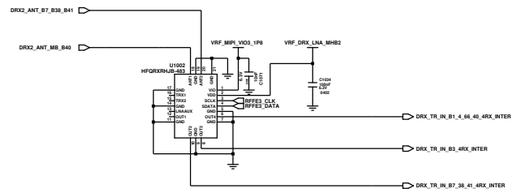

MHB LFEM(SUB3_MHB2)
(GSMHB, B1/2/3/4/7/25/38/41/66)

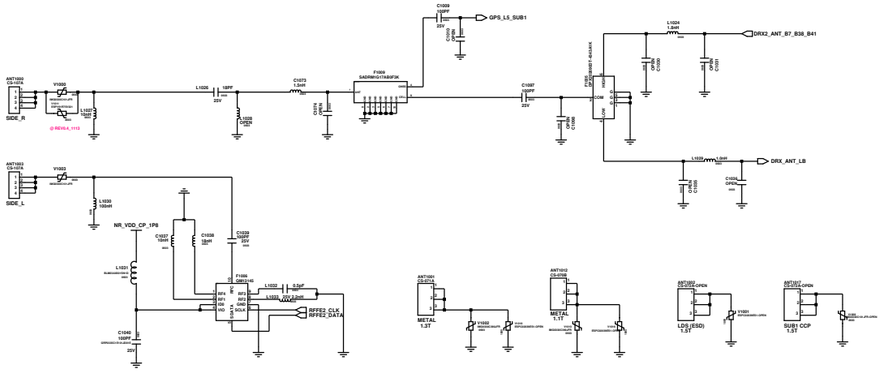

SUB1 ANT (GSM LB, B5,8,12,13,17,20,28// B7,38,40,41_4RX)

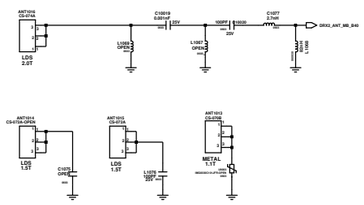

SUB5 (GPS L5, HB)

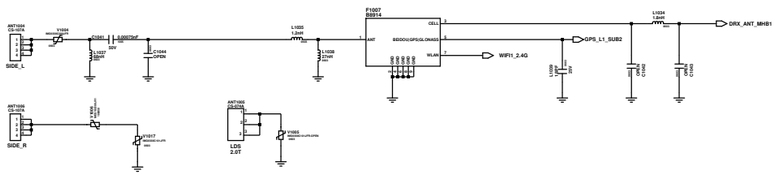

SUB2 ANT (GSM HB, B1/2/3/4/7/25/32/66,TDD B38/41, GPS, WIFI12.4G)

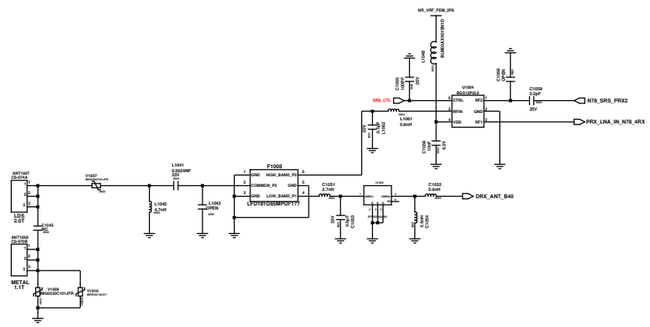

SUB6 ANT(N78_4RX, B1,3,4,66_4RX)

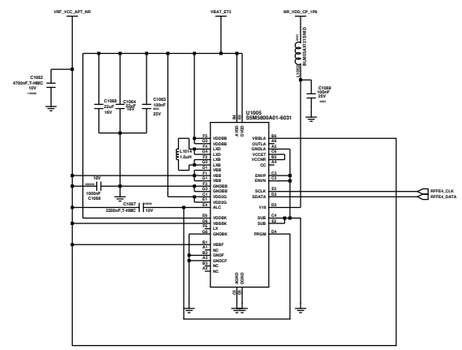

ET MODULATOR3 NR N77/78/41 APT

ENGINEER: USER010	SAMSUNG ELECTRONICS
DRAWN BY: USER010	
REV CHK:	TITLE: BEYOND2_EUR
DOC CTRL CHK:	SIZE: A0
MFG ENGR CHK:	24.1.16.A
CHANGED BY: USER010	DATE CHANGED: THURSDAY, JANUARY 4, 2018
TIME CHANGED: 2:00:00 PM	QA CHK:
REV:	DRAWING NUMBER:
PAGE: 2/19	

SAMSUNG CONFIDENTIAL
THIS DOCUMENT CONTAINS CONFIDENTIAL
PROPRIETARY INFORMATION THAT IS
SAMSUNG ELECTRONICS CO'S PROPERTY.
DO NOT DISCLOSE TO OR DUPLICATE FOR OTHERS
EXCEPT AS AUTHORIZED BY SAMSUNG.

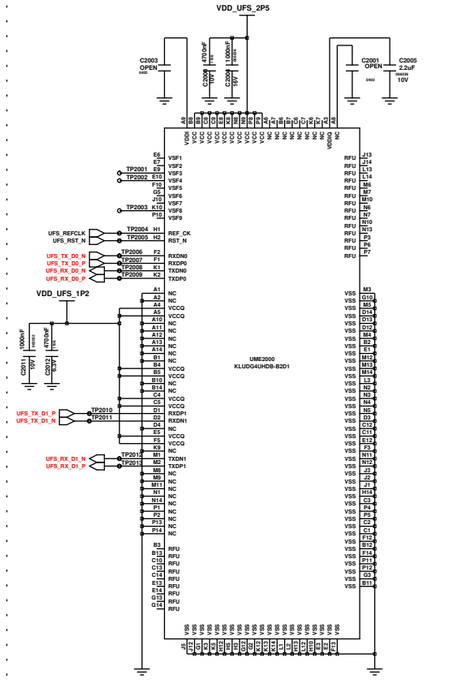

MEMORY

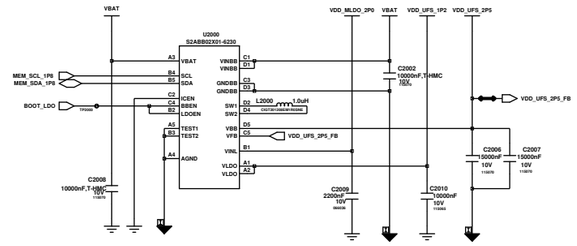

UFS BUCK BOOSTER

T-FLASH/SIM

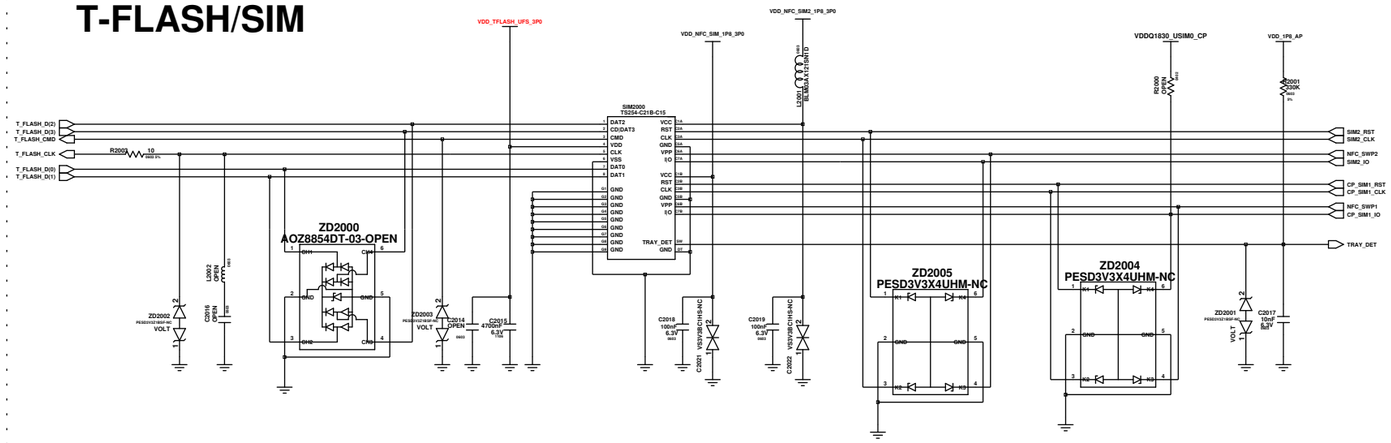

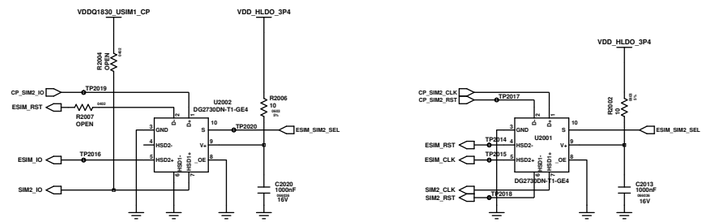

ISO SWITCH

Engineer:	CP & UFS MEMORY
Drawn by:	
R&D CHK:	TITLE: DREAM2_KANGCHEN
DOC CTRL CHK:	Size: A1
MFG ENGR CHK:	
QA CHK:	REV / Drawing Number: / Page: 2

Changed by: user118 | Date Changed: | Time Changed:

SAMSUNG CONFIDENTIAL
THIS DOCUMENT CONTAINS CONFIDENTIAL
(PROPRIETARY) INFORMATION THAT IS
SAMSUNG ELECTRONICS CO.'S PROPERTY.
DO NOT DISCLOSE THIS DOCUMENT TO THIRD PARTIES
EXCEPT AS AUTHORIZED BY SAMSUNG.

4. CONNECTIVITY / SENSOR

BT/WIFI

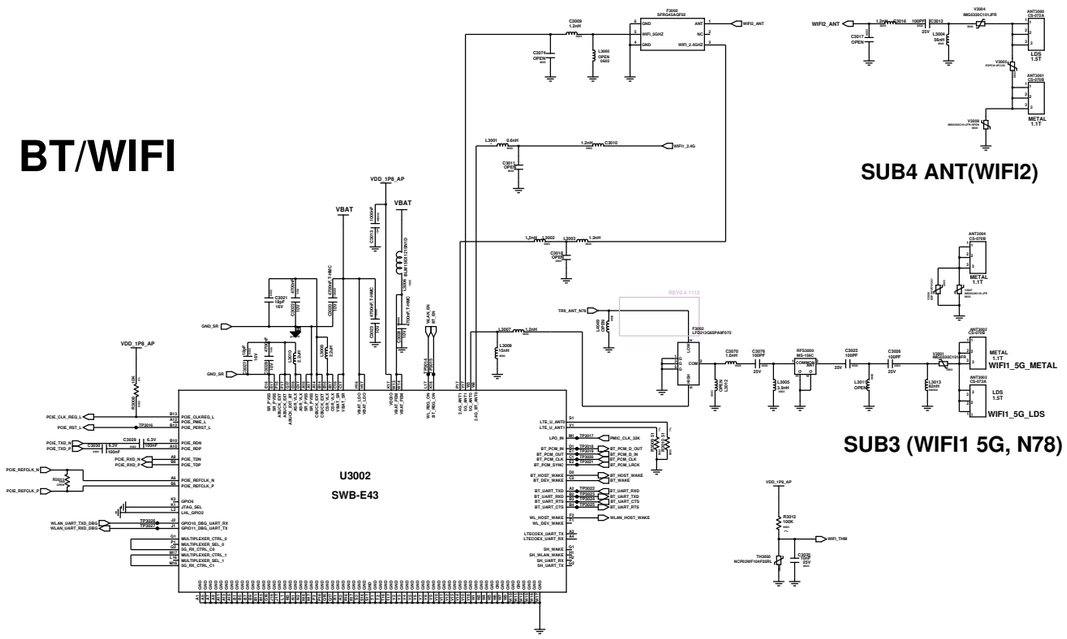

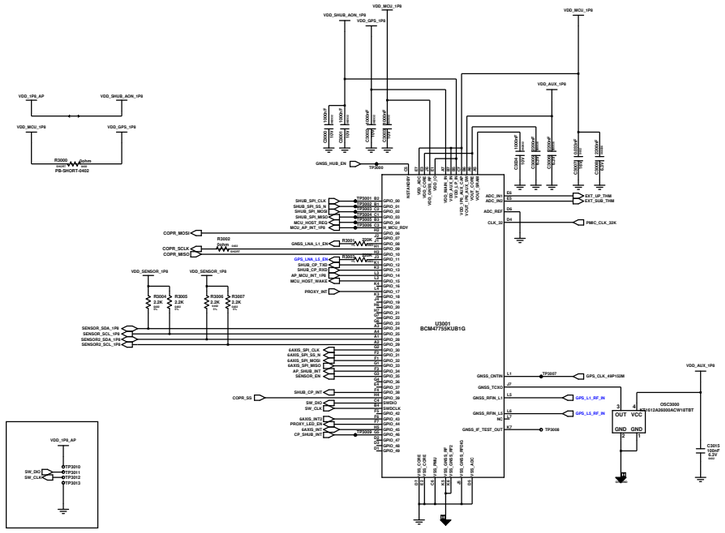

GPS + SENSOR HUB(BCM4775)

AUDIO

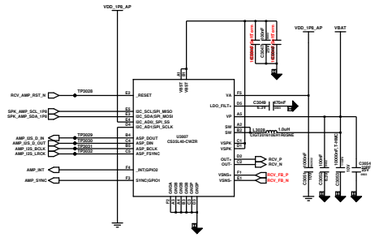

RCV AMP

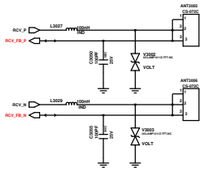

RCV CONTACT

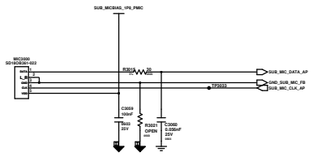

SUB MIC

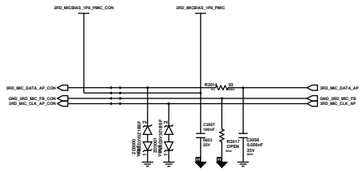

3RD MIC

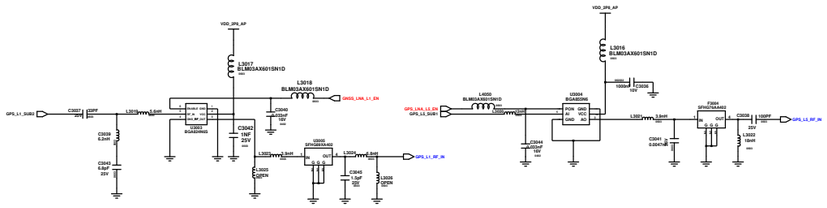

GPS L1

GPS L5

SENSORS

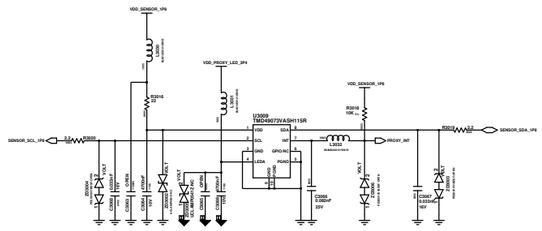

Proximeter/Ambient Light Sensor

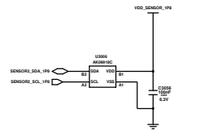

MAGNETIC SENSOR

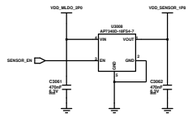

SENSOR POWER

SAMSUNG CONFIDENTIAL
THIS DOCUMENT CONTAINS CONFIDENTIAL PROPRIETARY INFORMATION THAT IS SAMSUNG ELECTRONICS CO'S PROPERTY. DO NOT DISCLOSE TO OR DUPLICATE FOR OTHERS EXCEPT AS AUTHORIZED BY SAMSUNG.

5. 2020 & ETC

2020 AP

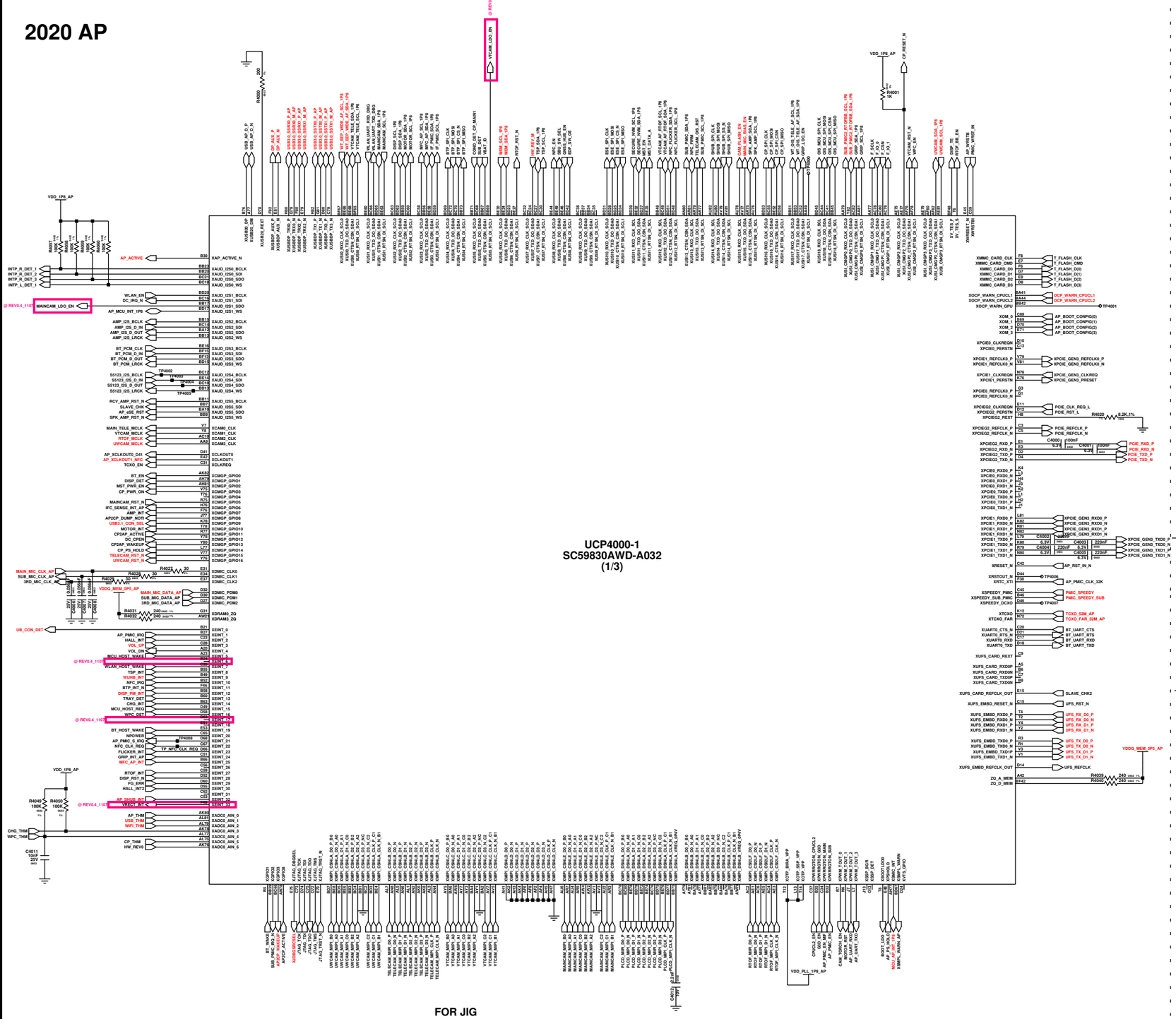

UCP4000-1
SC59830AWD-A032
(1/3)

H/W I2C

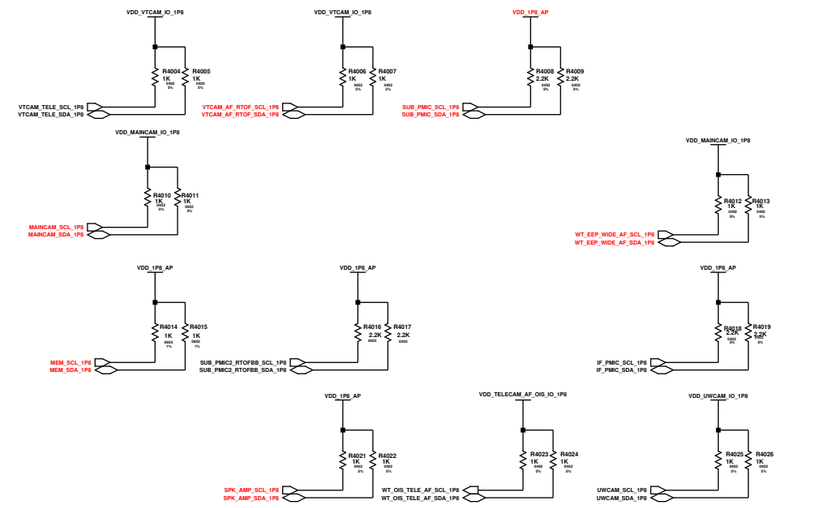

ETC

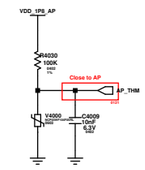

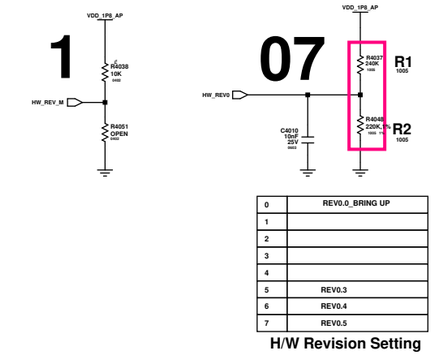

0	REV0.0_BRING UP
1	
2	
3	
4	
5	REV0.3
6	REV0.4
7	REV0.5

H/W Revision Setting

OM[2:0]	1st / 2nd
000	UFS_CH0 / USB
001	USB
010	SD CARD / USB
011	UFS_CH0 / SD CARD

iROM BOOT

FOR JIG

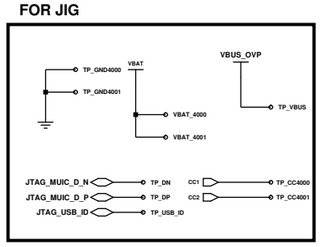

SECURE NVM - WILL BE CHANGED

JTAG CONNECTOR

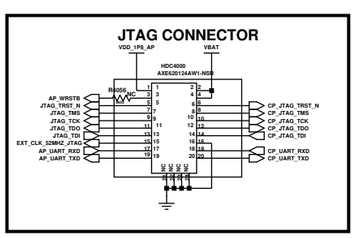

PCB JTAG

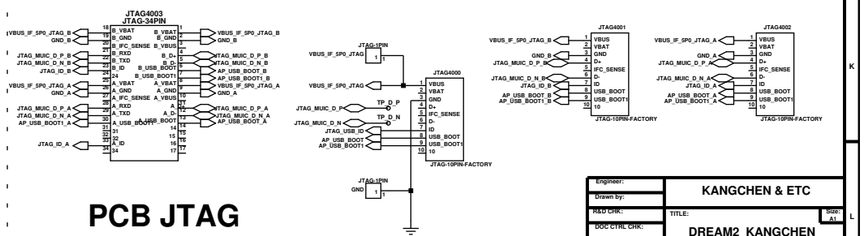

Engineer:	
Drawn by:	
R&D CHK:	
DOC CTRL CHK:	
MFG ENGR CHK:	
TITLE:	KANGCHEN & ETC
	DREAM2_KANGCHEN
SIZE	A1
REV	
Drawing Number	
6 Page	
Changed by:	
Date Changed:	
Time Changed:	
QA CHK:	

SAMSUNG CONFIDENTIAL
THIS DOCUMENT CONTAINS CONFIDENTIAL
PROPRIETARY INFORMATION THAT IS
SAMSUNG ELECTRONICS CO'S PROPERTY.
DO NOT DISCLOSE TO OR DUPLICATE FOR OTHERS
EXCEPT AS AUTHORIZED BY SAMSUNG.

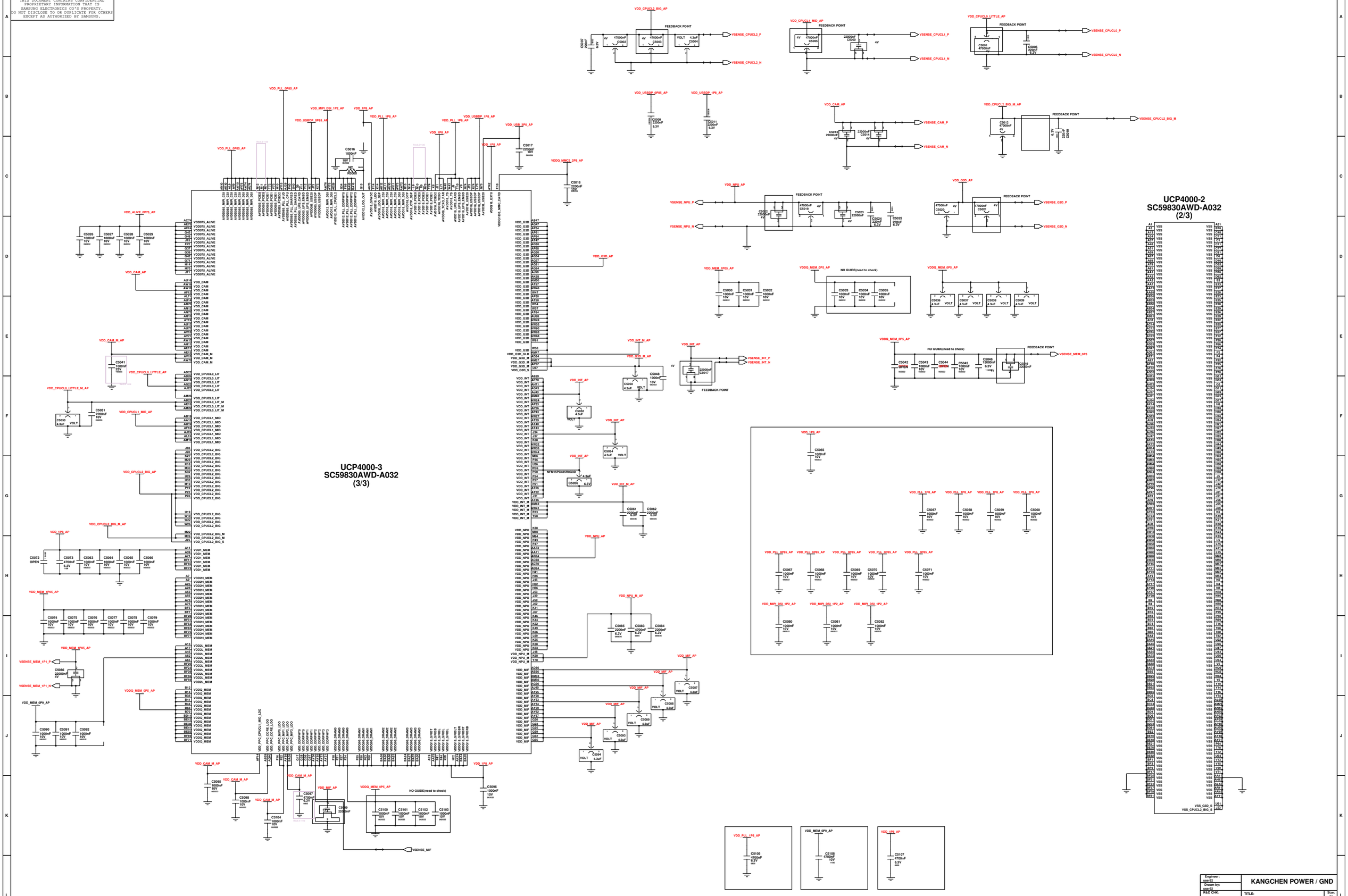

SAMSUNG CONFIDENTIAL
THIS DOCUMENT CONTAINS CONFIDENTIAL
(PROPRIETARY) INFORMATION THAT IS
SAMSUNG ELECTRONICS CO., LTD. PROPERTY.
DO NOT DISCLOSE THIS DOCUMENT TO OTHERS
EXCEPT AS AUTHORIZED BY SAMSUNG.

AP Master PMIC

SYM1 -> SYM2 (07/09)

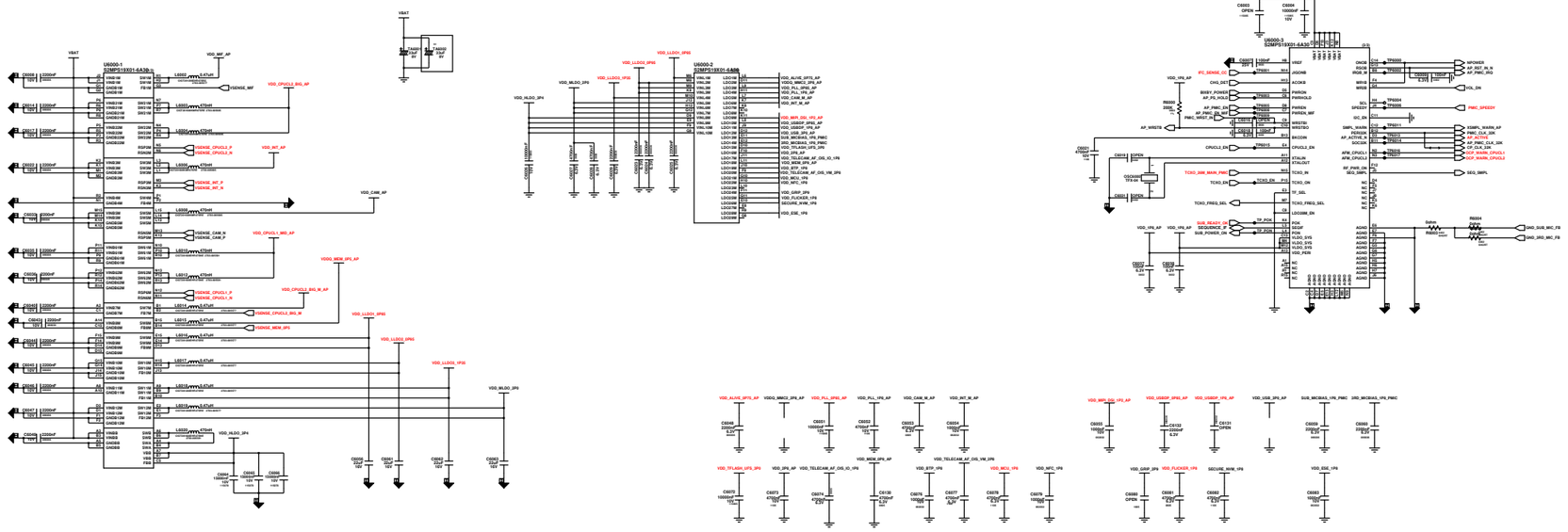

Slave PMIC

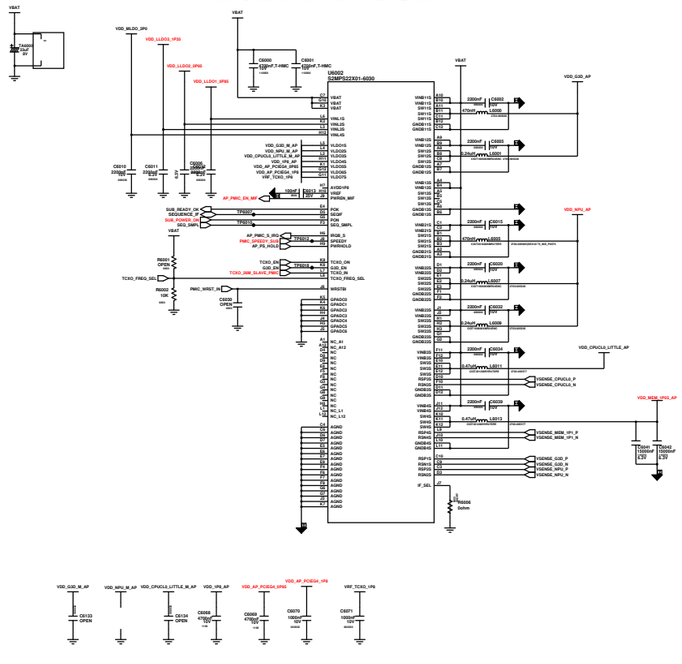

VCONN_BOOSTER

Interface PMIC

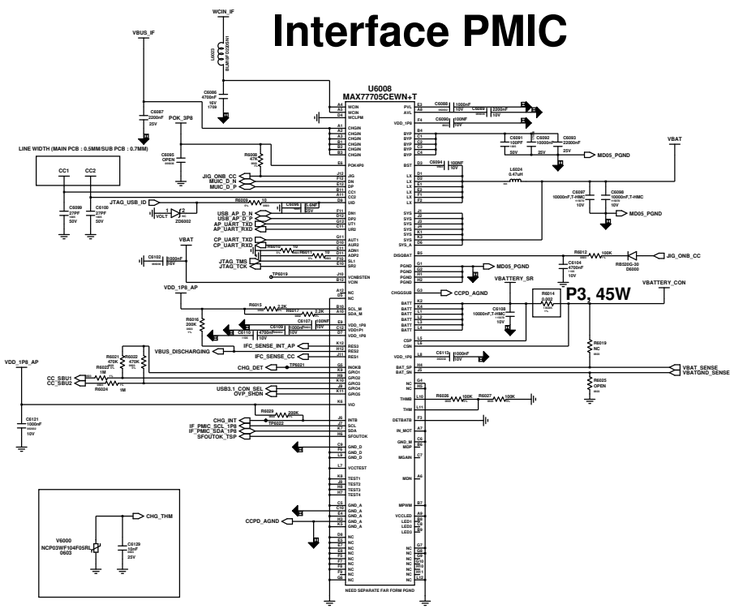

Array JTAG

IF FPCB

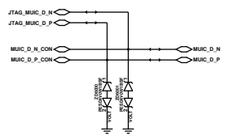

IF PMIC

USB2.0

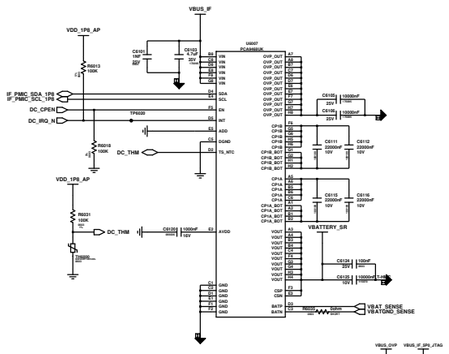

Direct Charger

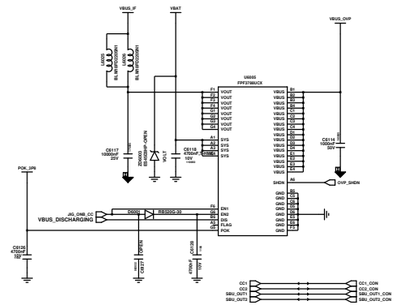

OVP LS

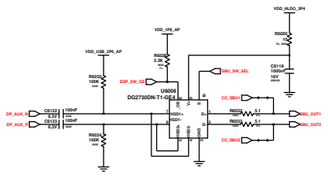

AUX SW

SAMSUNG CONFIDENTIAL
THIS DOCUMENT CONTAINS CONFIDENTIAL PROPRIETARY INFORMATION THAT IS SAMSUNG ELECTRONICS CO'S PROPERTY. DO NOT DISCLOSE TO OR DUPLICATE FOR OTHERS EXCEPT AS AUTHORIZED BY SAMSUNG.

9. VISUAL PART 1/2

SUB_PMIC

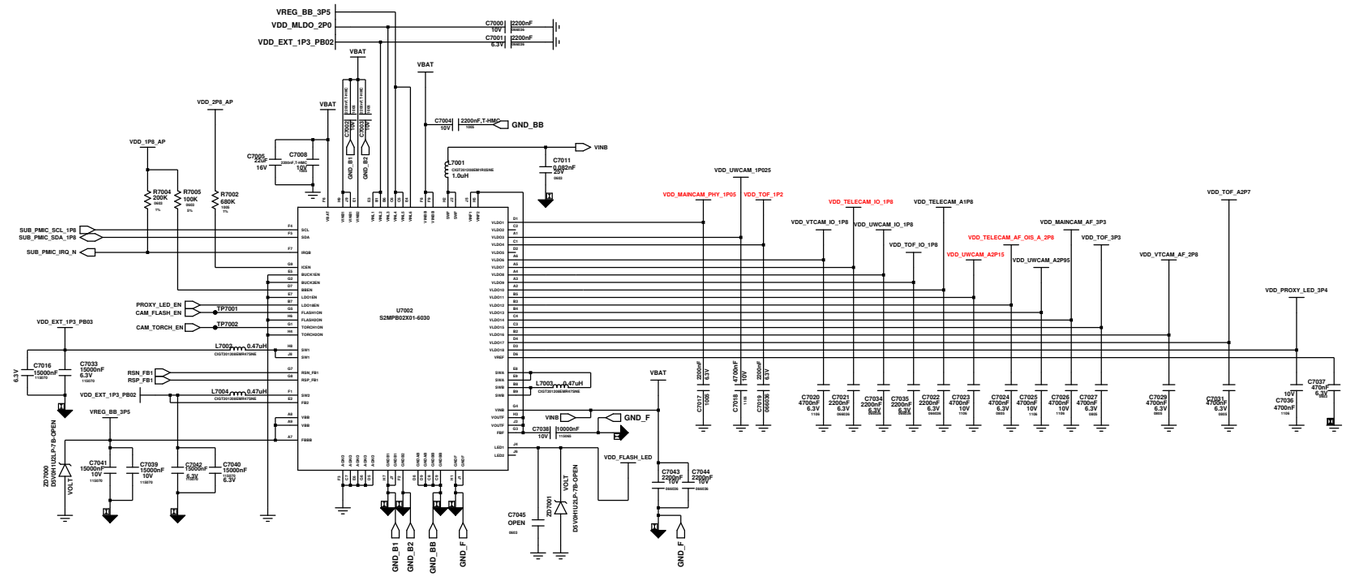

2ND CAM PMIC (PB03)

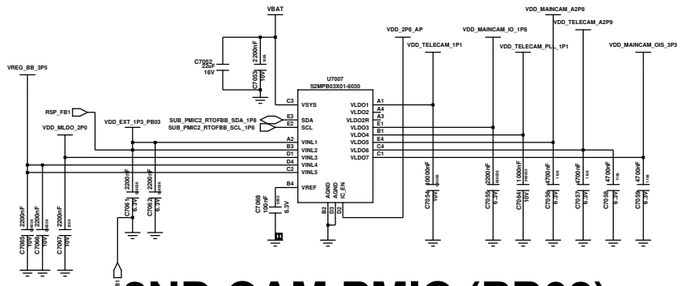

MAIN CAM POWER

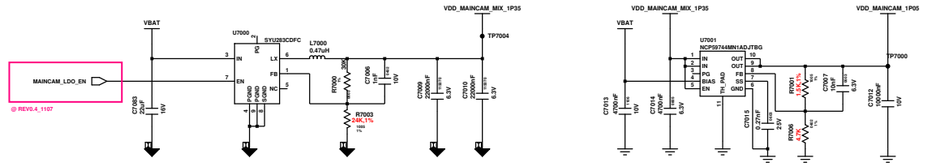

FRONT CAM POWER

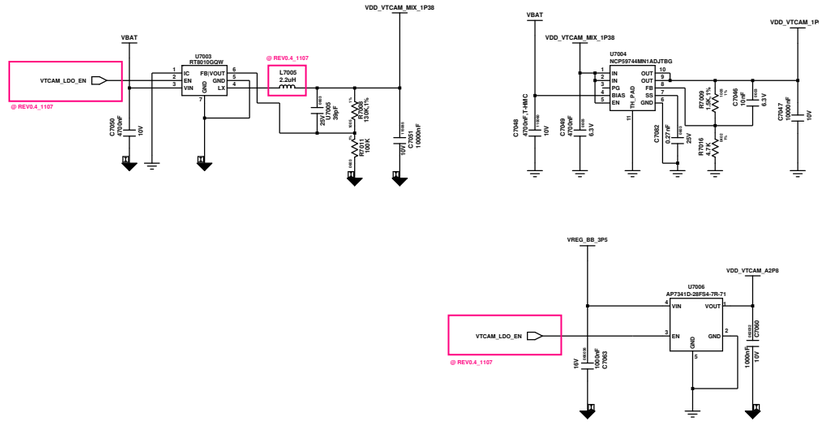

TOF CAM POWER

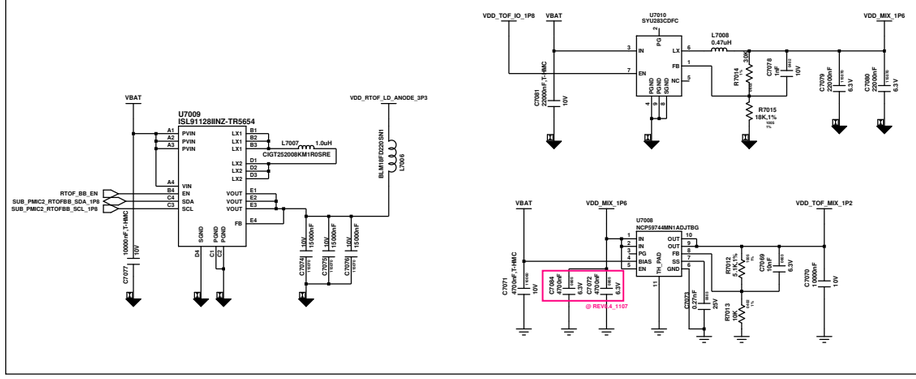

ENGINEER:	
DRAWN BY:	CAMERA, DISPLAY, MHL
R&D CHK:	TITLE:
DOC CTRL CHK:	DREAM2_KANGCHEN
MFG ENGR CHK:	

SIZE: A1

CHANGED BY:	DATE CHANGED:	TIME CHANGED:	QA CHK:	REV:	DRAWING NUMBER:	PAGE: 9

SAMSUNG CONFIDENTIAL
THIS DOCUMENT CONTAINS CONFIDENTIAL
PROPRIETARY INFORMATION THAT IS
SAMSUNG ELECTRONICS CO'S PROPERTY.
DO NOT DISCLOSE TO OR DUPLICATE FOR OTHERS
EXCEPT AS AUTHORIZED BY SAMSUNG.

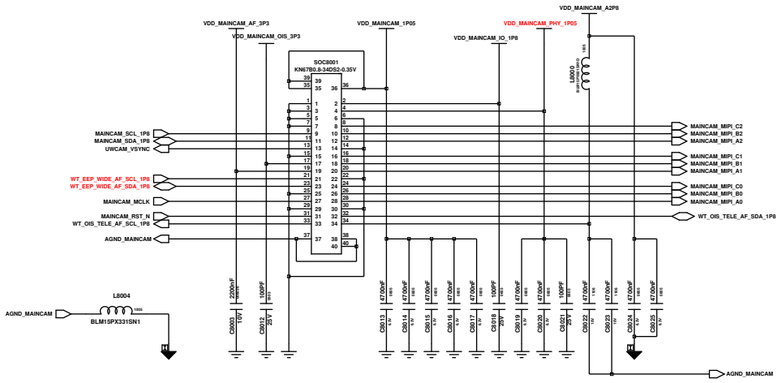

WIDE CAM

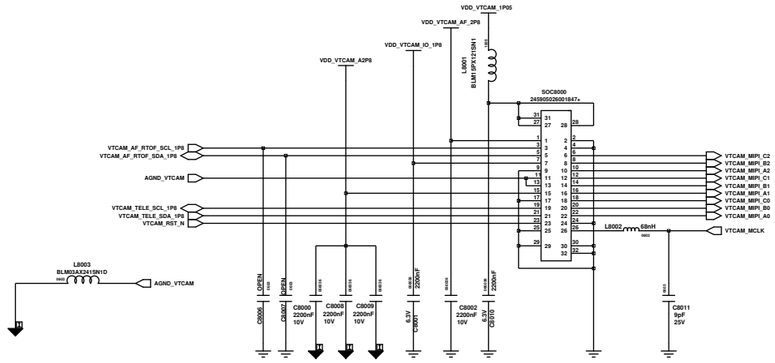

FRONT CAM

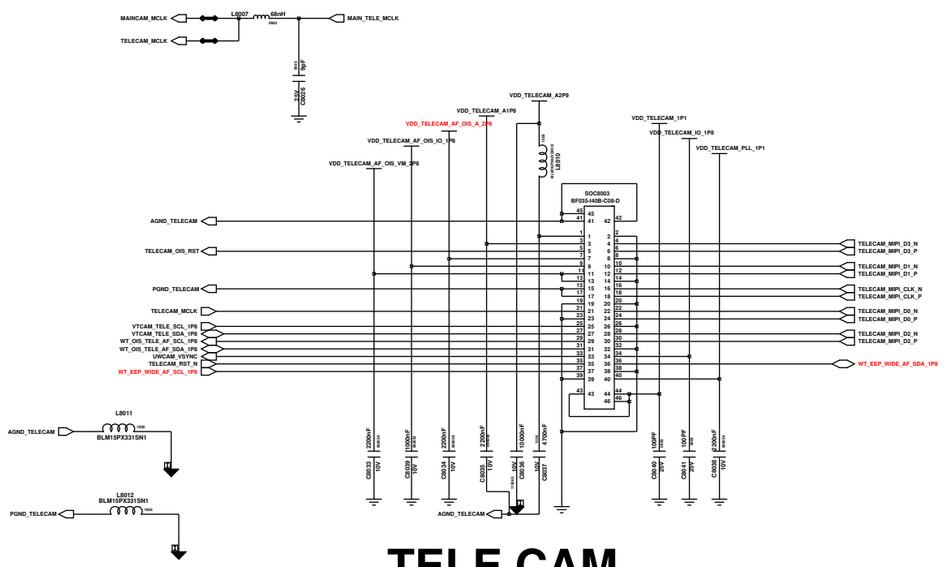

TELE CAM

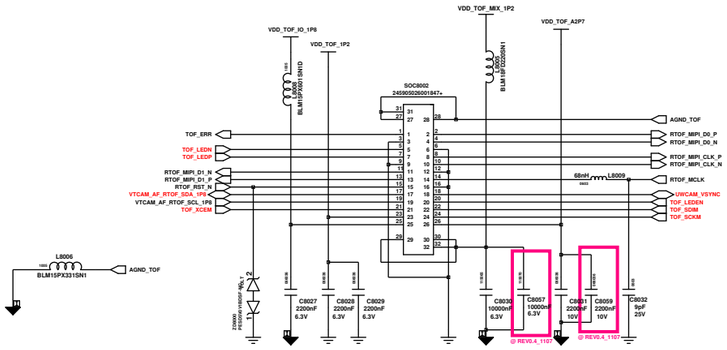

REAR TOF CAM

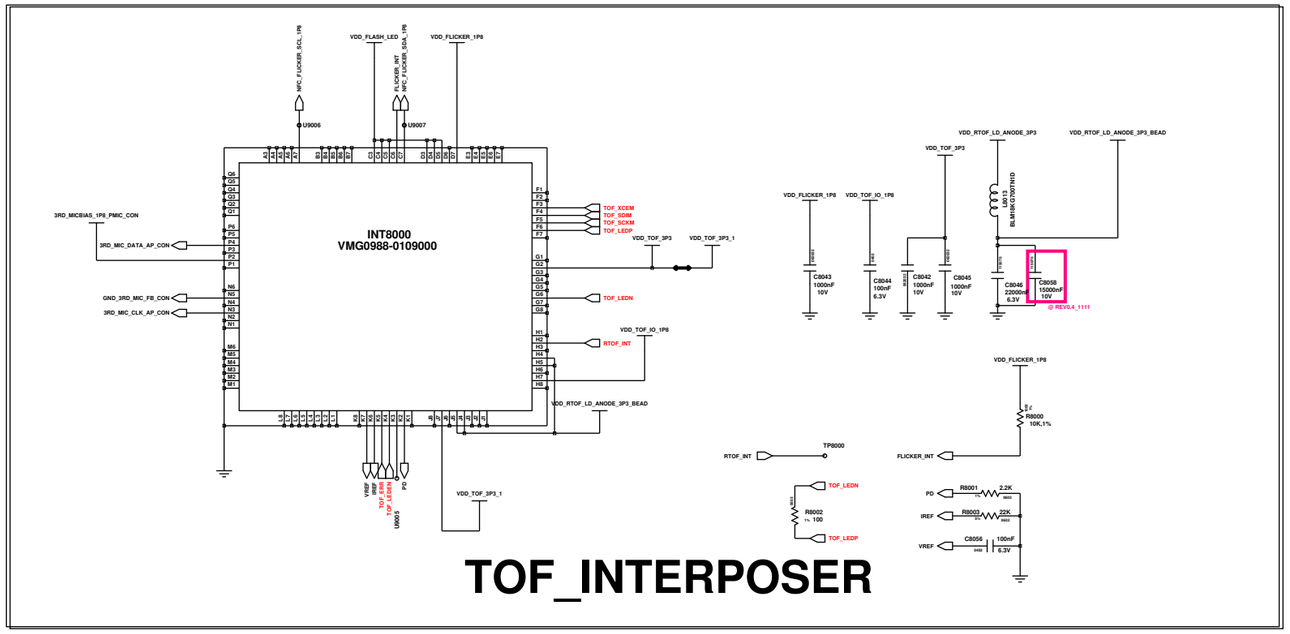

TOF_INTERPOSER

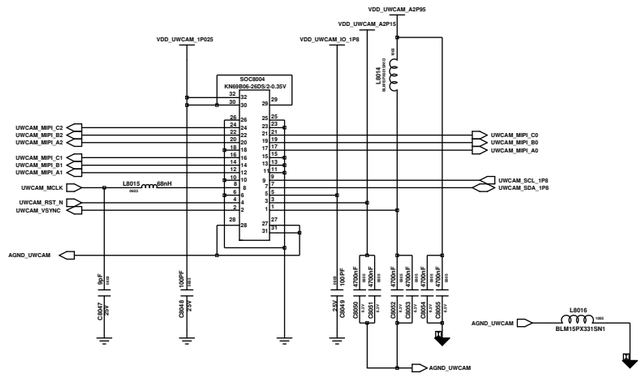

SUPER(ULTRA) WIDE CAM

Engineer: kim	SAMSUNG ELECTRONICS		
Drawn by: DREAM			
REV CHK:	TITLE: DREAM2_KANGCHEN	Size: A1	16 1 12 A
DOC CTRL CHK:			
MFG ENGR CHK:			
QA CHK:	REV	Drawing Number:	Page: 1

Changed by: user118 | Date Changed: Monday, May 2, 2016 | Time Changed: 4:35:43 am

SAMSUNG CONFIDENTIAL
THIS DOCUMENT CONTAINS CONFIDENTIAL
(INDUSTRIAL) INFORMATION THAT IS
SAMSUNG ELECTRONICS CO.'S PROPERTY.
DO NOT DISCLOSE THIS DOCUMENT TO OTHERS
EXCEPT AS AUTHORIZED BY SAMSUNG.

CP

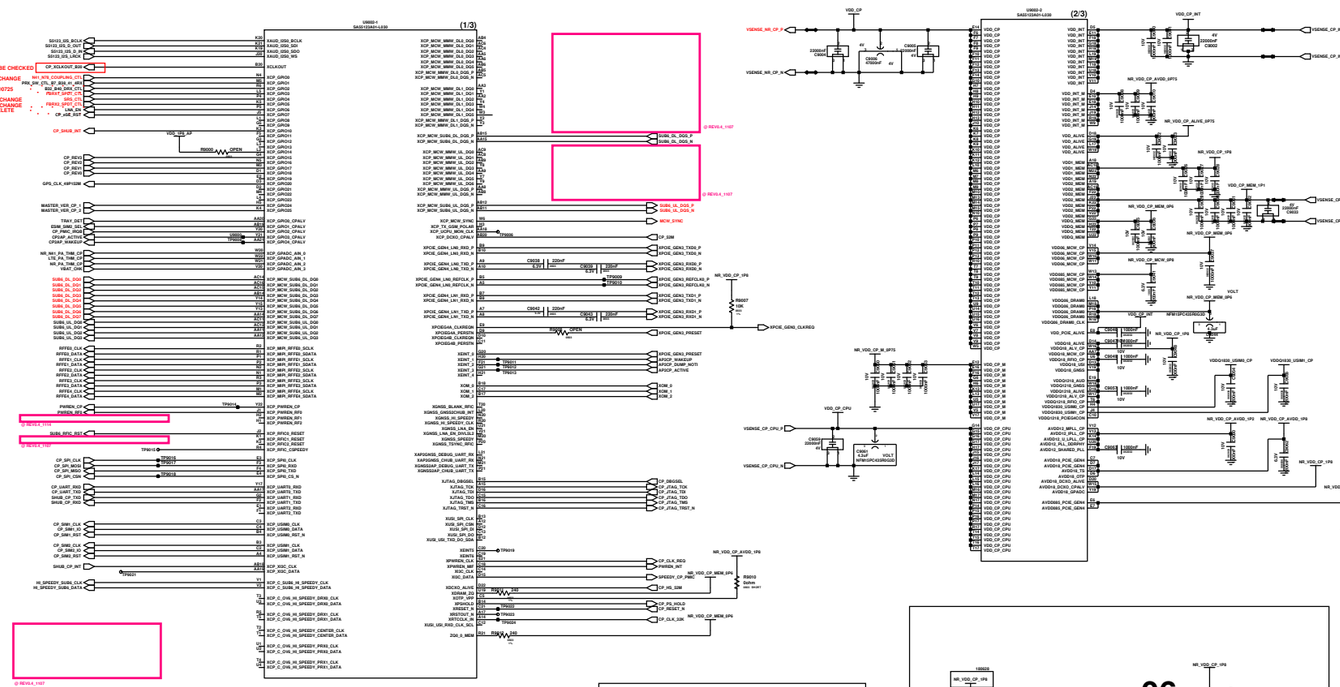

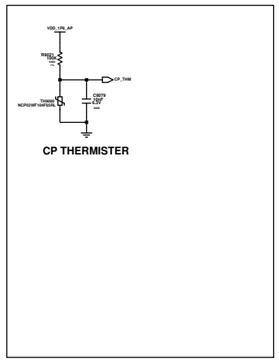

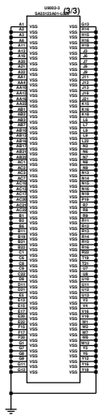

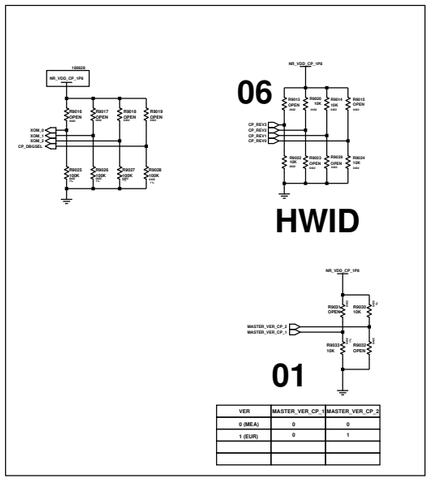

VER	MASTER_VER_CP_1	MASTER_VER_CP_2
0 (MEA)	0	0
1 (EUR)	0	1

CP PMIC

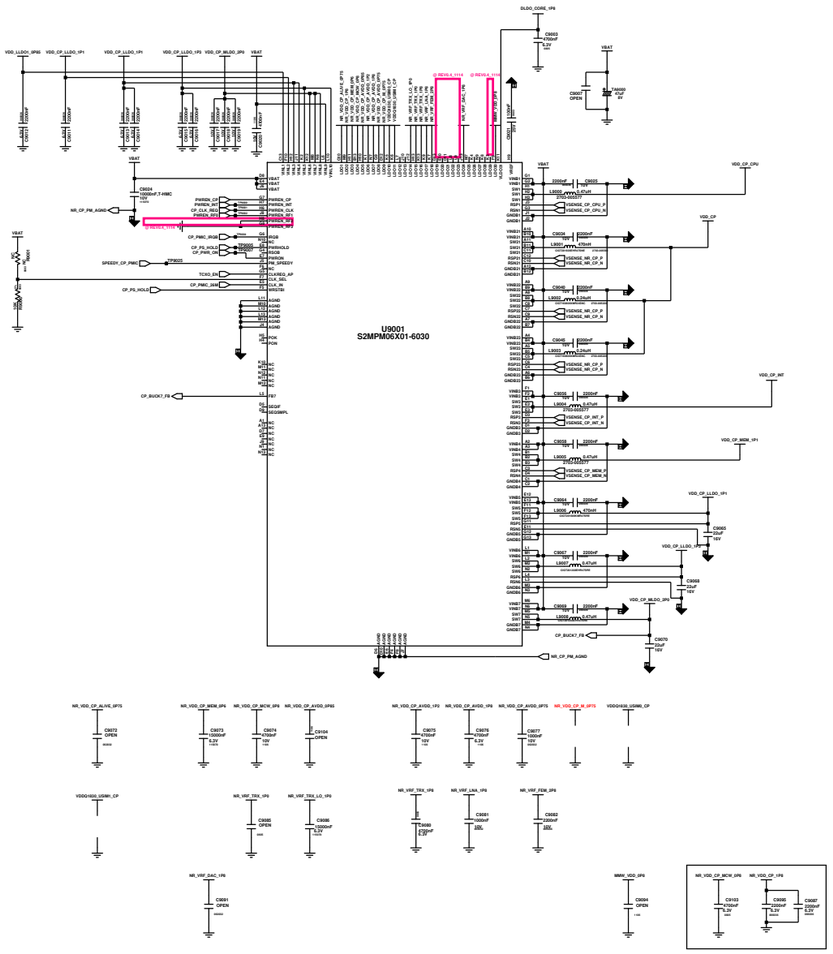

TCXO CLK

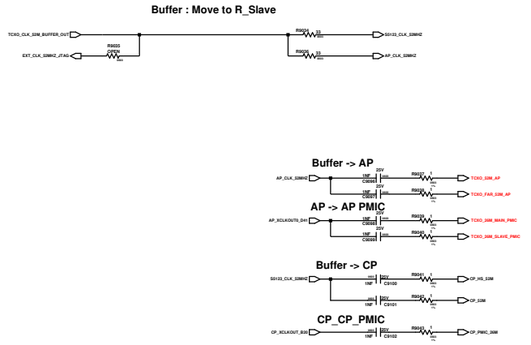

ENGINEER:	SAMSUNG ELECTRONICS
DATE:	
DESIGNER:	
CHECKED:	
REV CHK:	TITLE:
DOC CHG. CHK:	MK_NJOON_180104_1
MFG ENGR CHK:	
QA CHK:	REV: DRAWING NUMBER:
CHANGED BY: HONG	DATE CHANGED: THURSDAY, JANUARY 4, 2018
TIME CHANGED: 3:34:08 PM	

SAMSUNG CONFIDENTIAL
THIS DOCUMENT CONTAINS CONFIDENTIAL
PROPRIETARY INFORMATION THAT IS
SAMSUNG ELECTRONICS CO'S PROPERTY.
DO NOT DISCLOSE TO OR DUPLICATE FOR OTHERS
EXCEPT AS AUTHORIZED BY SAMSUNG.

@ REV0.4_1107

MMW IFIC

@ REV0.4_1107

MID (PICASSO REV00)

Shieldcan

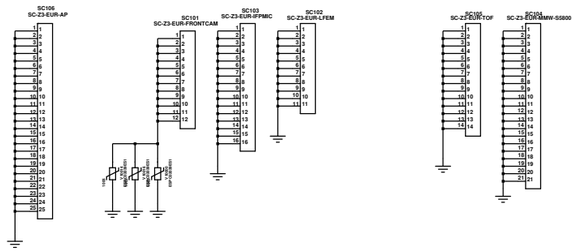

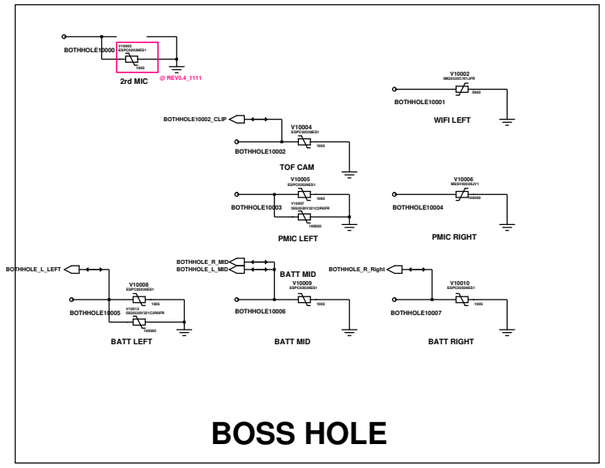

BOSS HOLE

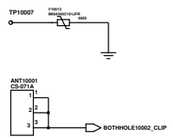

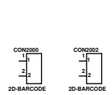

2D Barcode

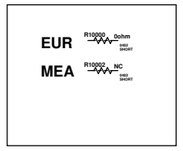

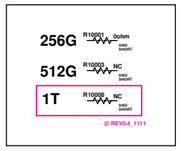

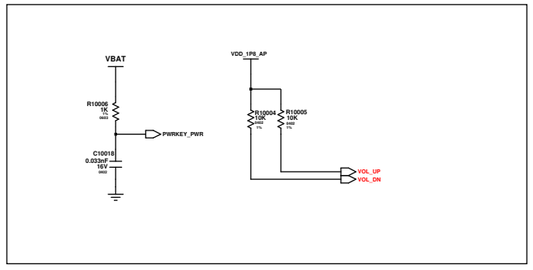

PWR,VOL KEY

Engineer: cad	SAMSUNG ELECTRONICS
Drawn by: cad	
R&D CHK:	TITLE: DREAM_REV00_KOR_0512
DOC CTRL CHK:	Size: A1
MFG ENGR CHK:	16 1 12 A
QA CHK:	REV:
Drawing Number:	Page: 10

Changed by:	Date Changed:	Time Changed:
cad	Thursday, May 12, 2016	2:08:37 pm

SAMSUNG CONFIDENTIAL
THIS DOCUMENT CONTAINS CONFIDENTIAL
PROPRIETARY INFORMATION THAT IS
SAMSUNG ELECTRONICS CO'S PROPERTY.
DO NOT DISCLOSE TO OR DUPLICATE FOR OTHERS
EXCEPT AS AUTHORIZED BY SAMSUNG.

L INTERPOSER PIN

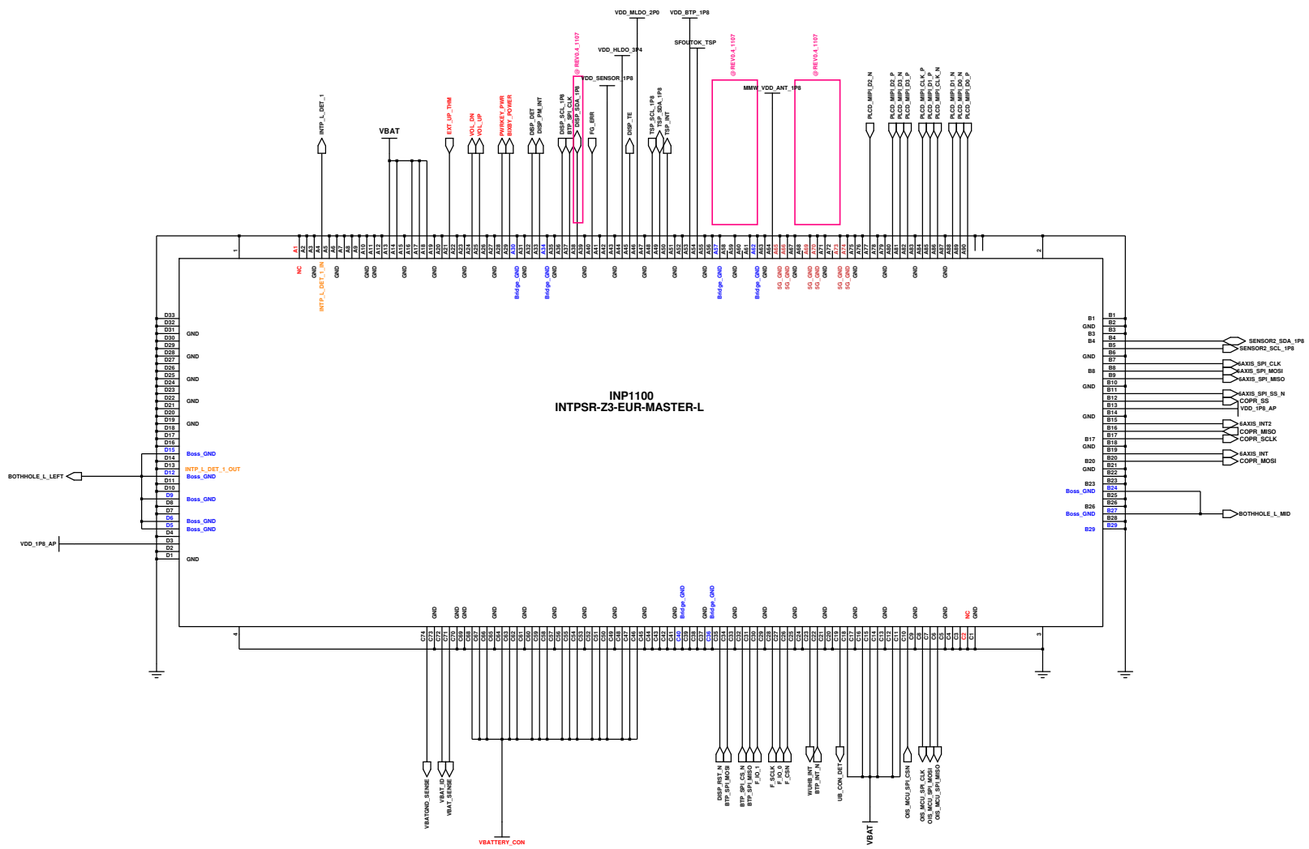

Engineer:	CP & UFS MEMORY
Drawn by:	
R&D CHK:	TITLE: DREAM2_KANGCHEN — Size: A1
DOC CTRL CHK:	
MFG ENGR CHK:	

Changed by:	Date Changed:	Time Changed:	QA CHK:	REV	Drawing Number:	Page:
user118						3

SAMSUNG CONFIDENTIAL
THIS DOCUMENT CONTAINS CONFIDENTIAL
PROPRIETARY INFORMATION THAT IS
SAMSUNG ELECTRONICS CO'S PROPERTY.
DO NOT DISCLOSE TO OR DUPLICATE FOR OTHERS
EXCEPT AS AUTHORIZED BY SAMSUNG.

R_INTERPOSER PIN

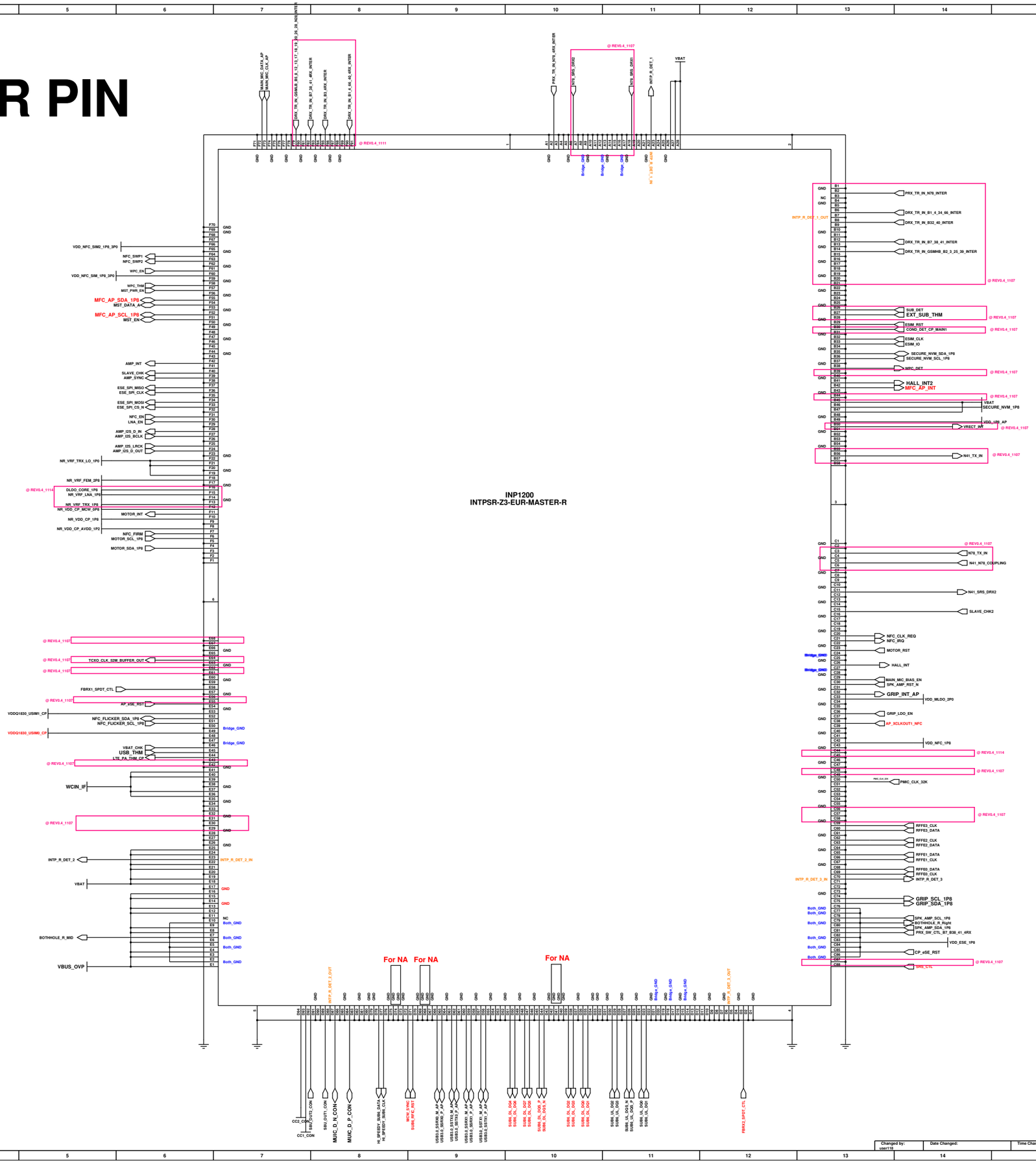

Engineer:	CP & UFS MEMORY
Drawn by:	
R&D CHK:	TITLE: DREAM2_KANGCHEN
DOC CTRL CHK:	Size: A1
MFG ENGR CHK:	

Changed by:	Date Changed:	Time Changed:	QA CHK:	REV	Drawing Number:	Page:
user115						3

Model :
Revision :
Manufacture Count :
Charge :
Contact :
Date :
Routing :
Resin :

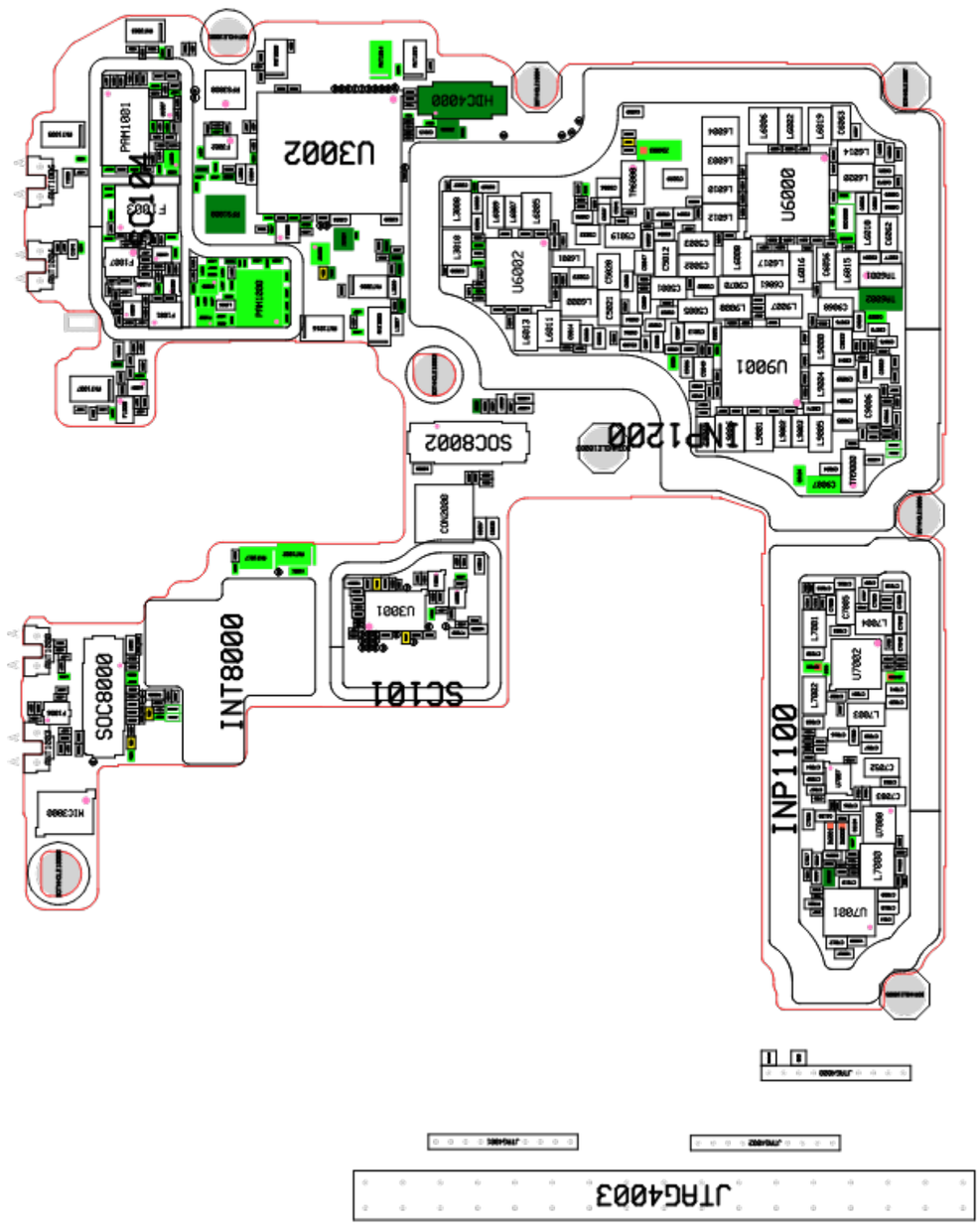

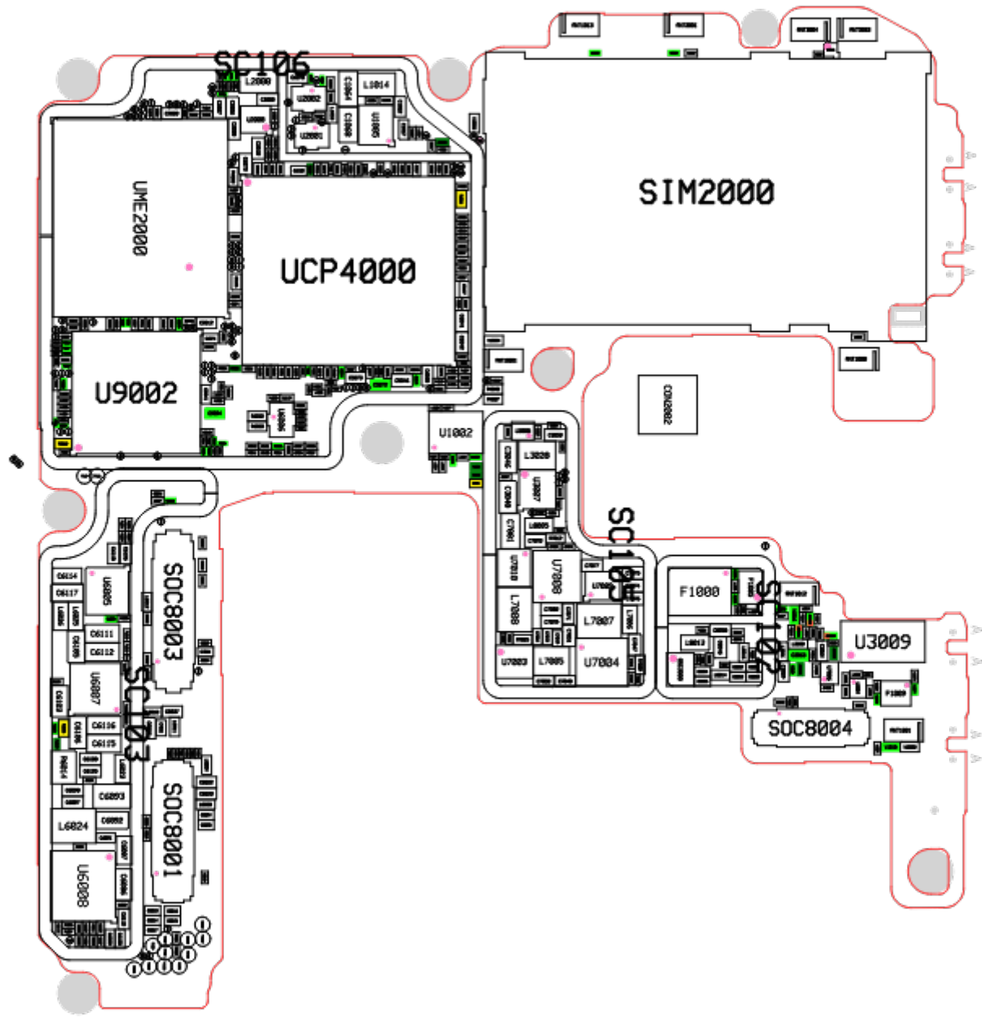

Model :
Revision :
Manufacture Count :
Charge :
Contact :
Date :
Routing :
Resin :

SAMSUNG CONFIDENTIAL
THIS DOCUMENT CONTAINS CONFIDENTIAL
PROPRIETARY INFORMATION THAT IS
SAMSUNG ELECTRONICS CO'S PROPERTY.
DO NOT DISCLOSE TO OR DUPLICATE FOR OTHERS
EXCEPT AS AUTHORIZED BY SAMSUNG.

SM-G988B_SLAVE_R_REV0.5

2019.11.29

sheet01 : RF 1 MAIN ANT
sheet02 : RF 2 SUB ANT
sheet03 : WIFI 11AY, IF CONN
sheet04 : CHARGE, MST
sheet05 : NFC, eSIM
sheet06 : INTERPOSER

SAMSUNG CONFIDENTIAL
THIS DOCUMENT CONTAINS CONFIDENTIAL
AND/OR PROPRIETARY INFORMATION THAT IS
THE PROPERTY OF SAMSUNG ELECTRONICS CO., LTD.
DO NOT DISCLOSE THIS DOCUMENT TO OTHER OTHERS
EXCEPT AS AUTHORIZED BY SAMSUNG.

SLAVE_RIGHT_PCB

RF1 - MAIN_ANT

visit new 18page

RF Connector

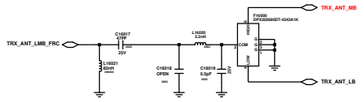

MAIN1 ANT(LB/MB)
(GSM LB/MB, FDD B1/2/3/4/5/8/12/13/17/18/19/20/25/26/28/32/66)

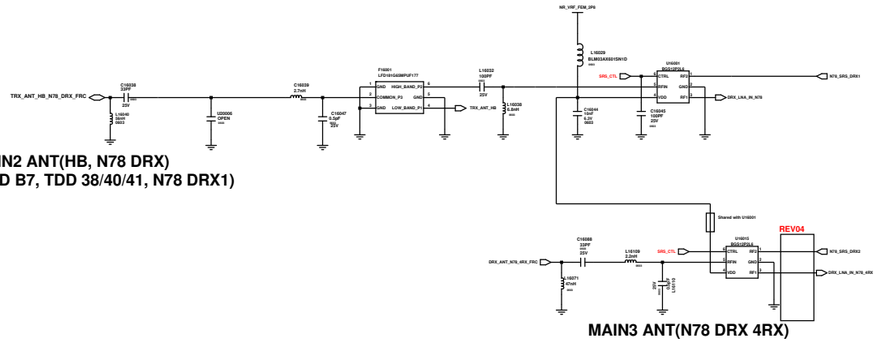

MAIN2 ANT(HB, N78 DRX)
(FDD B7, TDD 38/40/41, N78 DRX1)

MAIN3 ANT(N78 DRX 4RX)

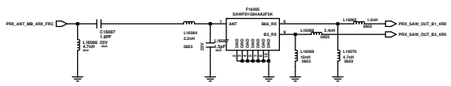

MAIN4 ANT (B1/3/4/66_4RX)

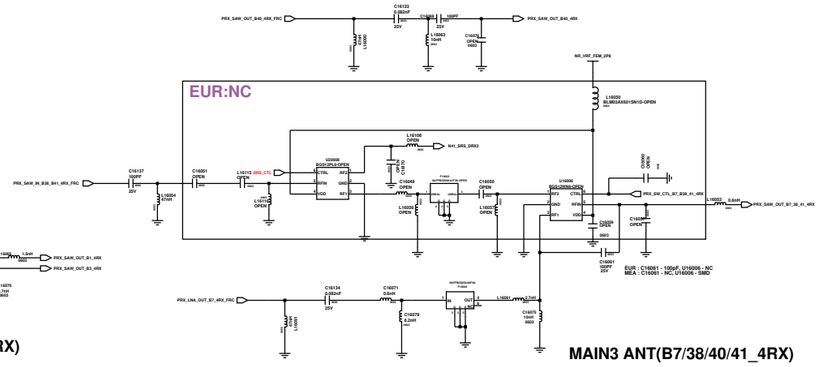

MAIN3 ANT(B7/38/40/41_4RX)

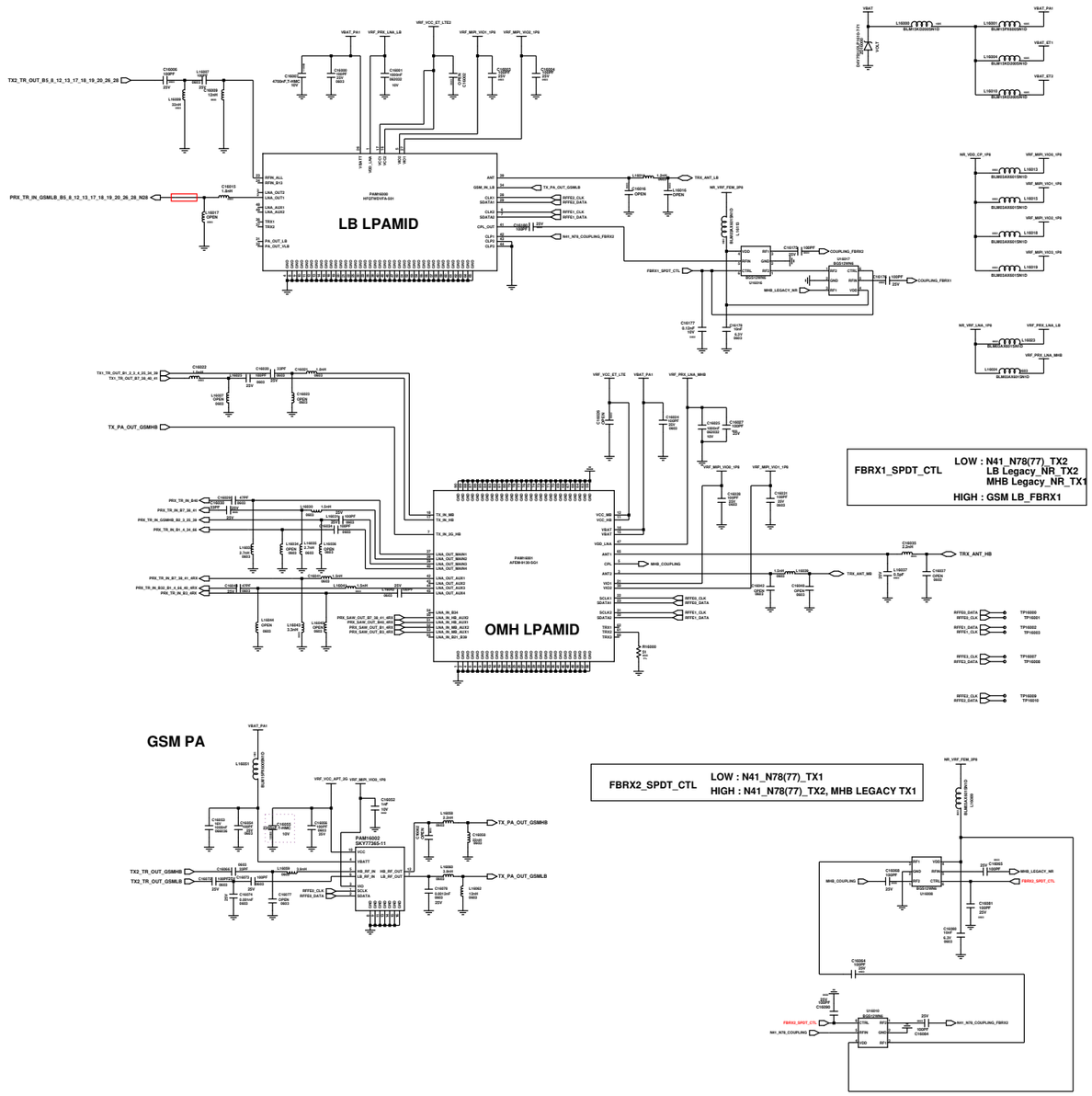

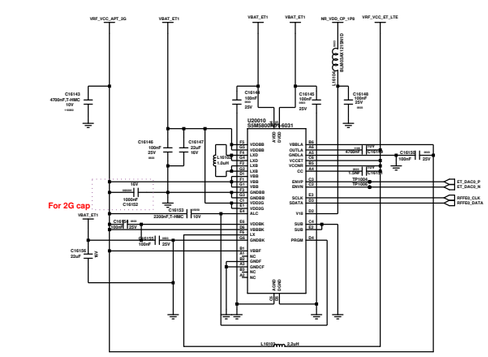

ET MODULATOR1 2G/3G/LTE MHB

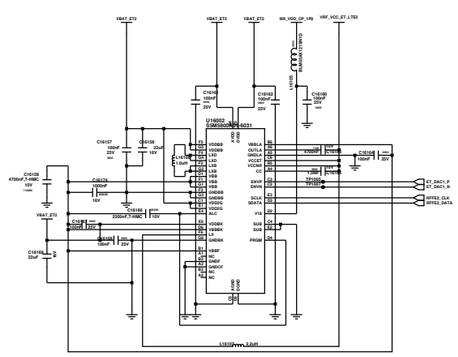

ET MODULATOR2 3G/LTE LB

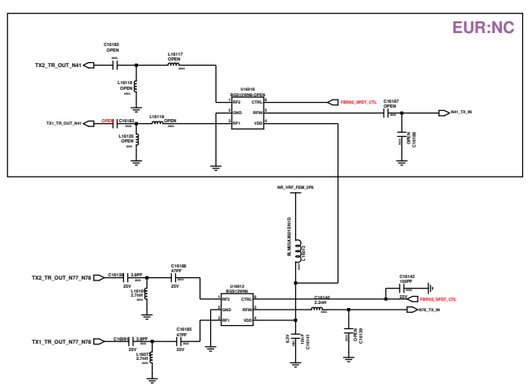

	SLAVE_CHK			SLAVE_CHK_2		
		R18010	R18009		R18012	R18011
MEA / LTE+FR1+N41	0	100k	open	0	100k	open
EUR / LTE+FR1	0	100k	open	1	open	100k

ENGINEER:	RF1
DESIGNER:	
CHANGED BY: USER1416	
READ CHK:	TITLE: Z3
DOC CTRL CHK:	SIZE: A4
MFG ENGR CHK:	24 X 16.8
CHANGED BY: USER1416 / DATE CHANGED: THURSDAY, JANUARY 4, 2018 / TIME CHANGED: 8:04:38 PM / QA CHK: / REV: / DRAWING NUMBER: / PAGE: 1	

SAMSUNG CONFIDENTIAL
THIS DOCUMENT CONTAINS CONFIDENTIAL
PROPRIETARY INFORMATION THAT IS
SAMSUNG ELECTRONICS CO'S PROPERTY.
DO NOT DISCLOSE TO OR DUPLICATE FOR OTHERS
EXCEPT AS AUTHORIZED BY SAMSUNG.

RF2 - SUB ANT

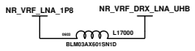

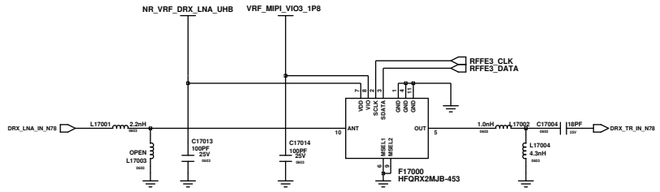

UHB_LFEM(DRX1)

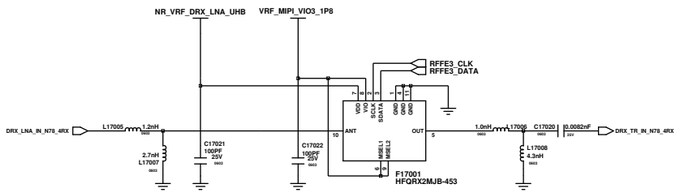

UHB_LFEM(DRX2)

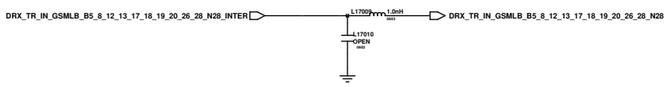

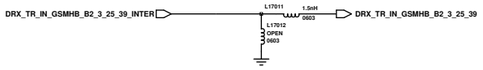

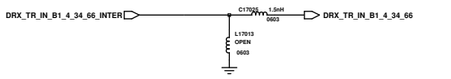

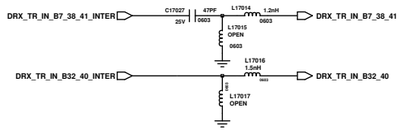

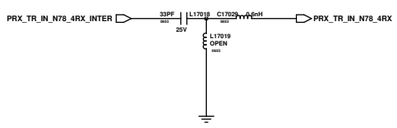

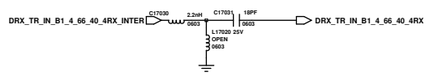

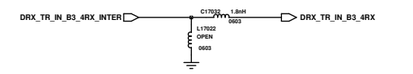

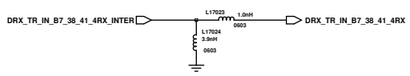

TRANSCEIVER (S5510)

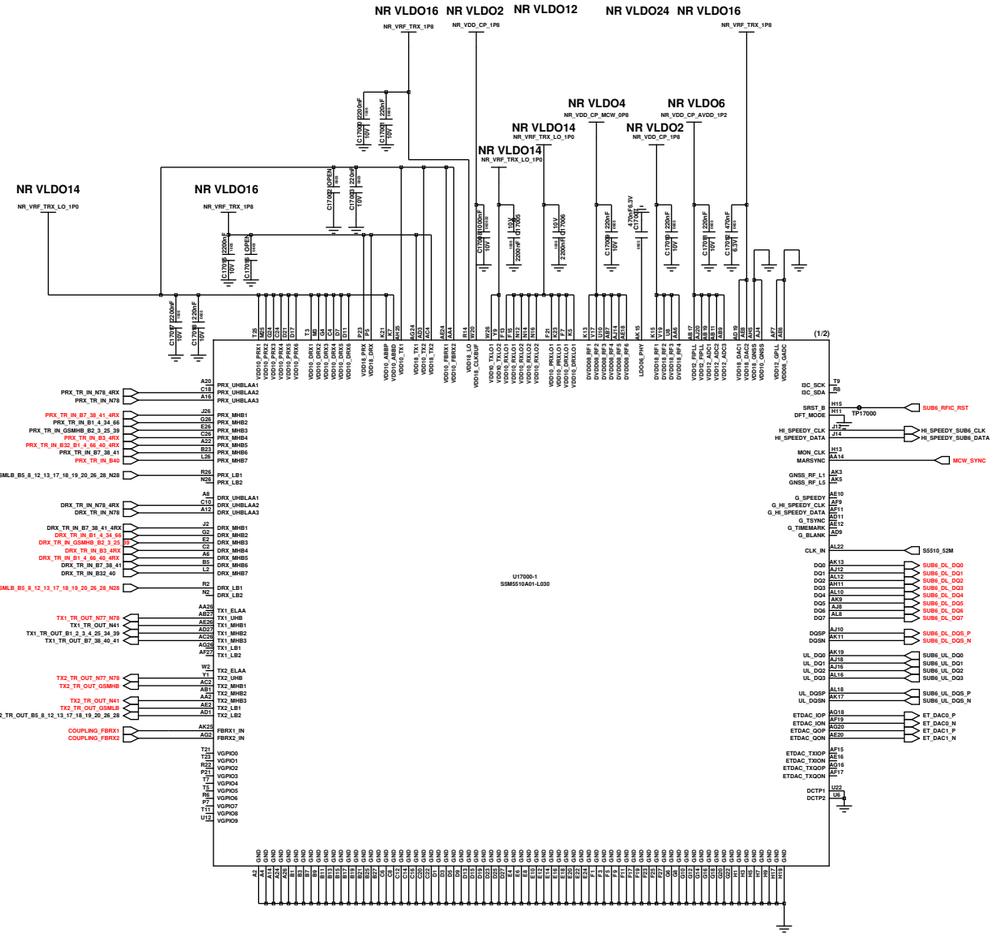

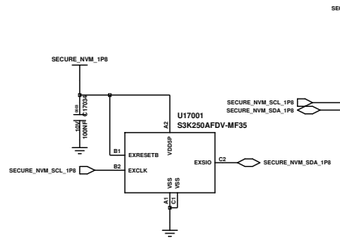

Engineer:		RF2	
Drawn by:			
R&D CHK:		TITLE: Z3	Size: A1
DOC CTRL CHK:			
MFG ENGR CHK:			
QA CHK:		REV	Drawing Number:

Changed by: user118 | Date Changed: | Time Changed: | Page: 2

SAMSUNG CONFIDENTIAL
THIS DOCUMENT CONTAINS CONFIDENTIAL
PROPRIETARY INFORMATION THAT IS
SAMSUNG ELECTRONICS CO'S PROPERTY.
DO NOT DISCLOSE TO OR DUPLICATE FOR OTHERS
EXCEPT AS AUTHORIZED BY SAMSUNG.

Lower SUB Conn.

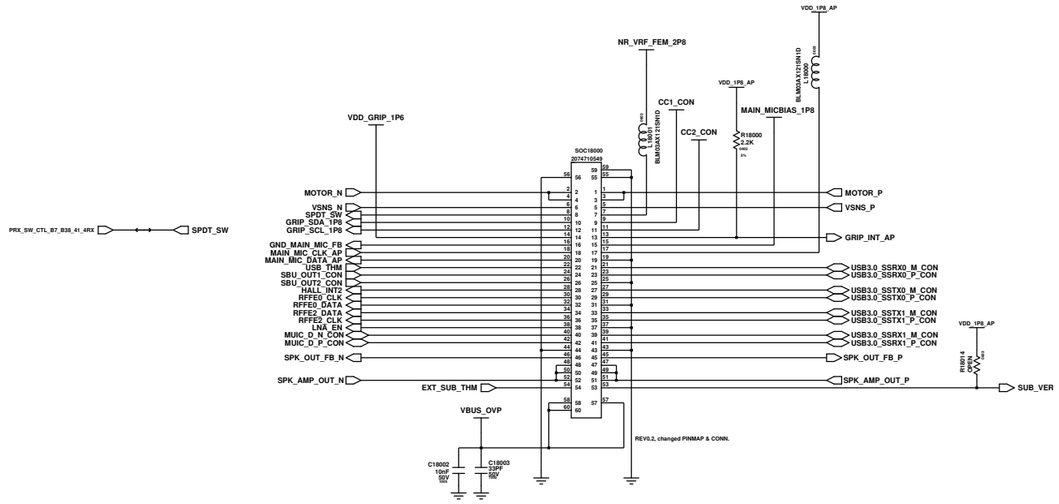

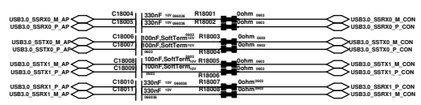

FRC CHECK

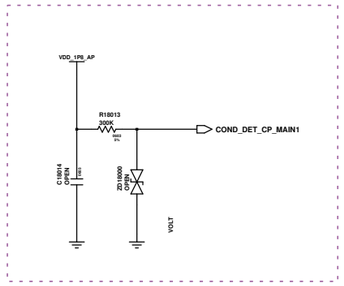

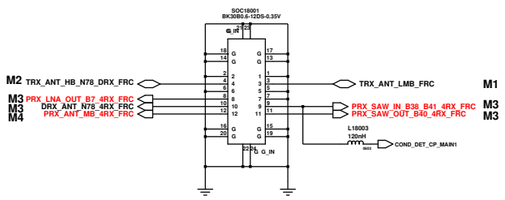

Legacy B2B Con

RIGHT (Rear View)

EUR: R18011-100k, R18012-NC
MEA: R18011-NC, R18012-100k

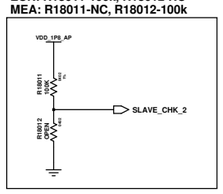

SLAVE CHECK

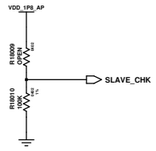

2D Barcode

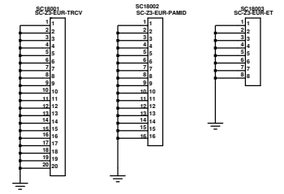

SHIELD CAN

Engineer:		11AY & IF CONN	
Drawn by:			
R&D CHK:		TITLE: Z3	Size: A1
DOC CTRL CHK:			
MFG ENGR CHK:			
Changed by: user118	Date Changed:	Time Changed:	QA CHK:
REV	Drawing Number:		Page: 3

SAMSUNG CONFIDENTIAL
THIS DOCUMENT CONTAINS CONFIDENTIAL
PROPRIETARY INFORMATION THAT IS
SAMSUNG ELECTRONICS CO'S PROPERTY.
DO NOT DISCLOSE TO OR DUPLICATE FOR OTHERS
EXCEPT AS AUTHORIZED BY SAMSUNG.

CHARGER

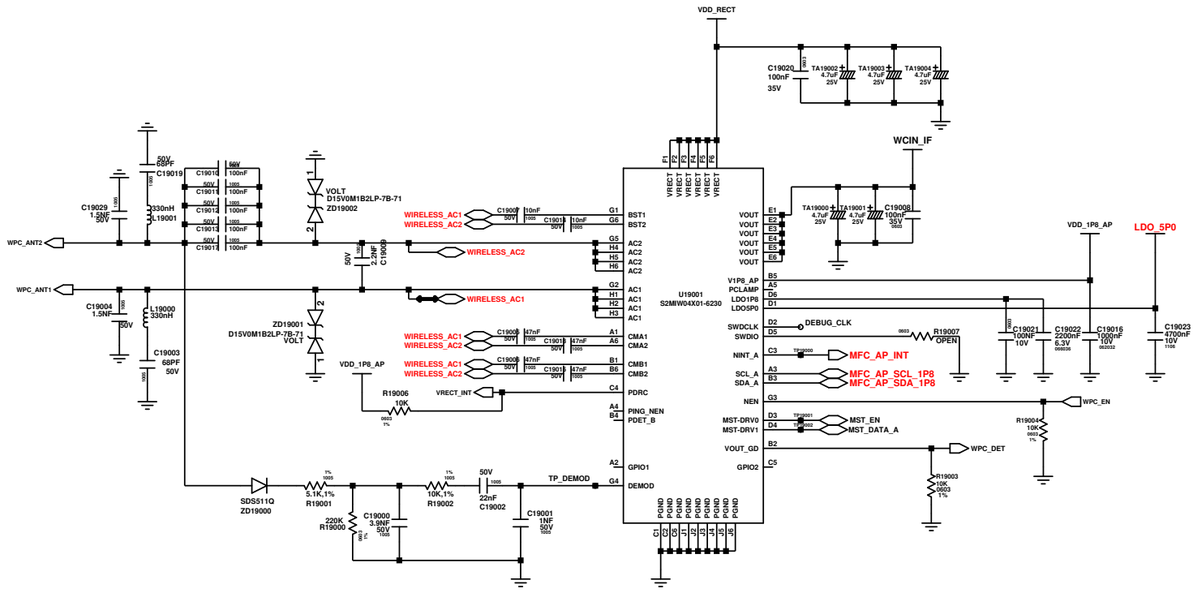

WIRELESS CHARGER IC

AUX SW

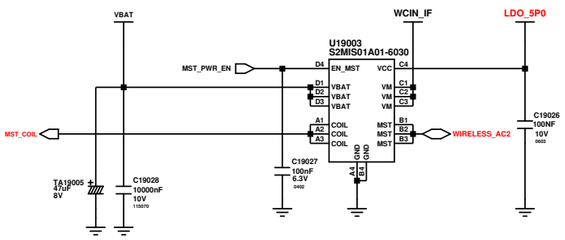

MST SWITCH

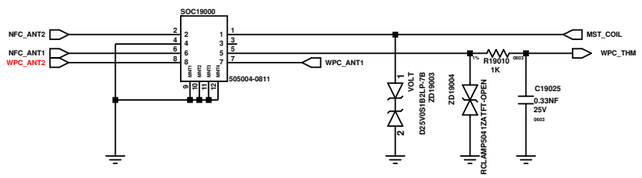

MST,NFC,WPC Conn

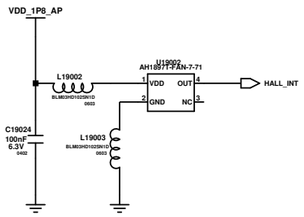

COVER_DETECT HALL_IC

SAMSUNG CONFIDENTIAL
THIS DOCUMENT CONTAINS CONFIDENTIAL
PROPRIETARY INFORMATION THAT IS
SAMSUNG ELECTRONICS CO'S PROPERTY.
DO NOT DISCLOSE TO OR DUPLICATE FOR OTHERS
EXCEPT AS AUTHORIZED BY SAMSUNG.

NFC + eSIM Combo (SEN4)

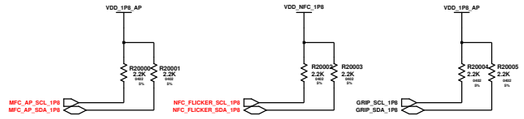

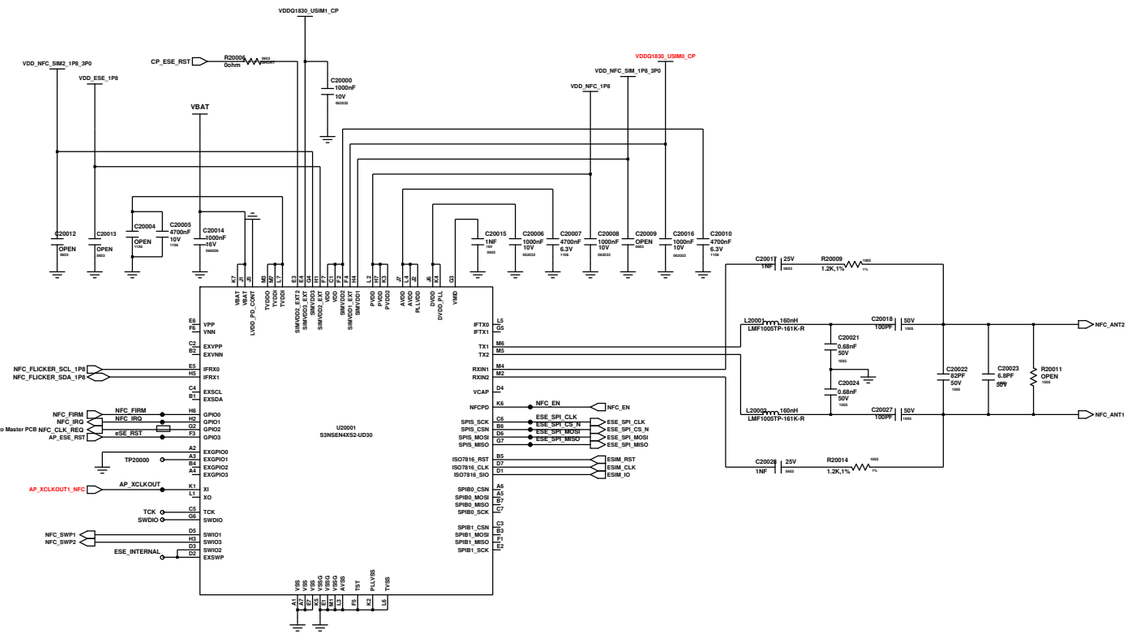

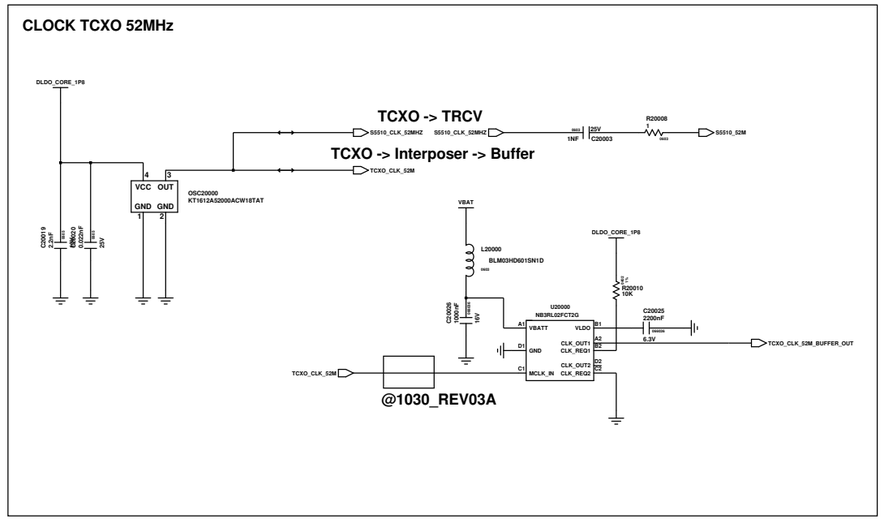

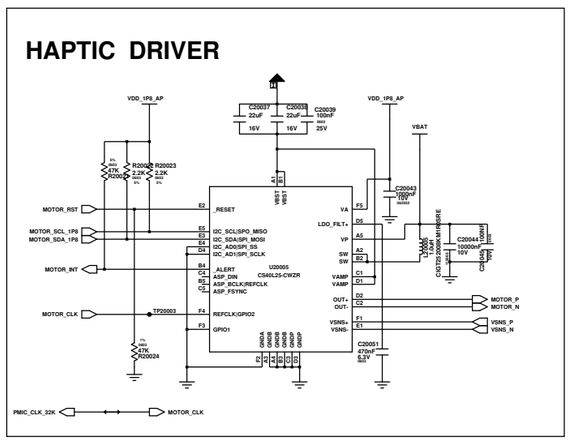

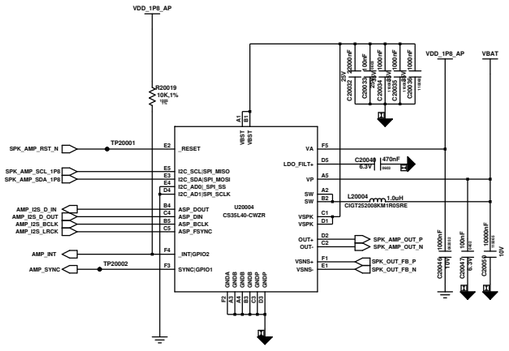

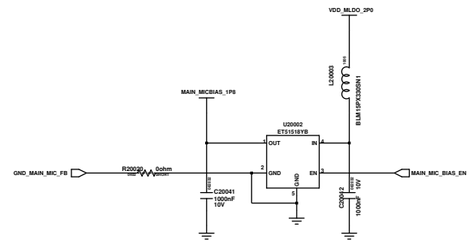

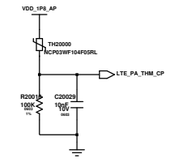

THERMISTER
Stack

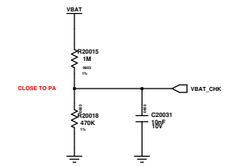

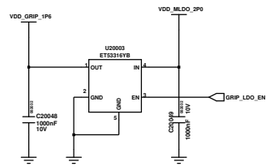

SPK AMP

MIC BIAS

GRIP POWER

Engineer:	NFC & eSIM
Drawn by:	
R&D CHK:	TITLE: Z3
DOC CTRL CHK:	Size: A1
MFG ENGR CHK:	

Changed by:	Date Changed:	Time Changed:	QA CHK:	REV	Drawing Number:	Page:
cad						5

SAMSUNG CONFIDENTIAL
THIS DOCUMENT CONTAINS CONFIDENTIAL
PROPRIETARY INFORMATION THAT IS
SAMSUNG ELECTRONICS CO'S PROPERTY.
DO NOT DISCLOSE TO OR DUPLICATE FOR OTHERS
EXCEPT AS AUTHORIZED BY SAMSUNG.

INTERPOSER PIN

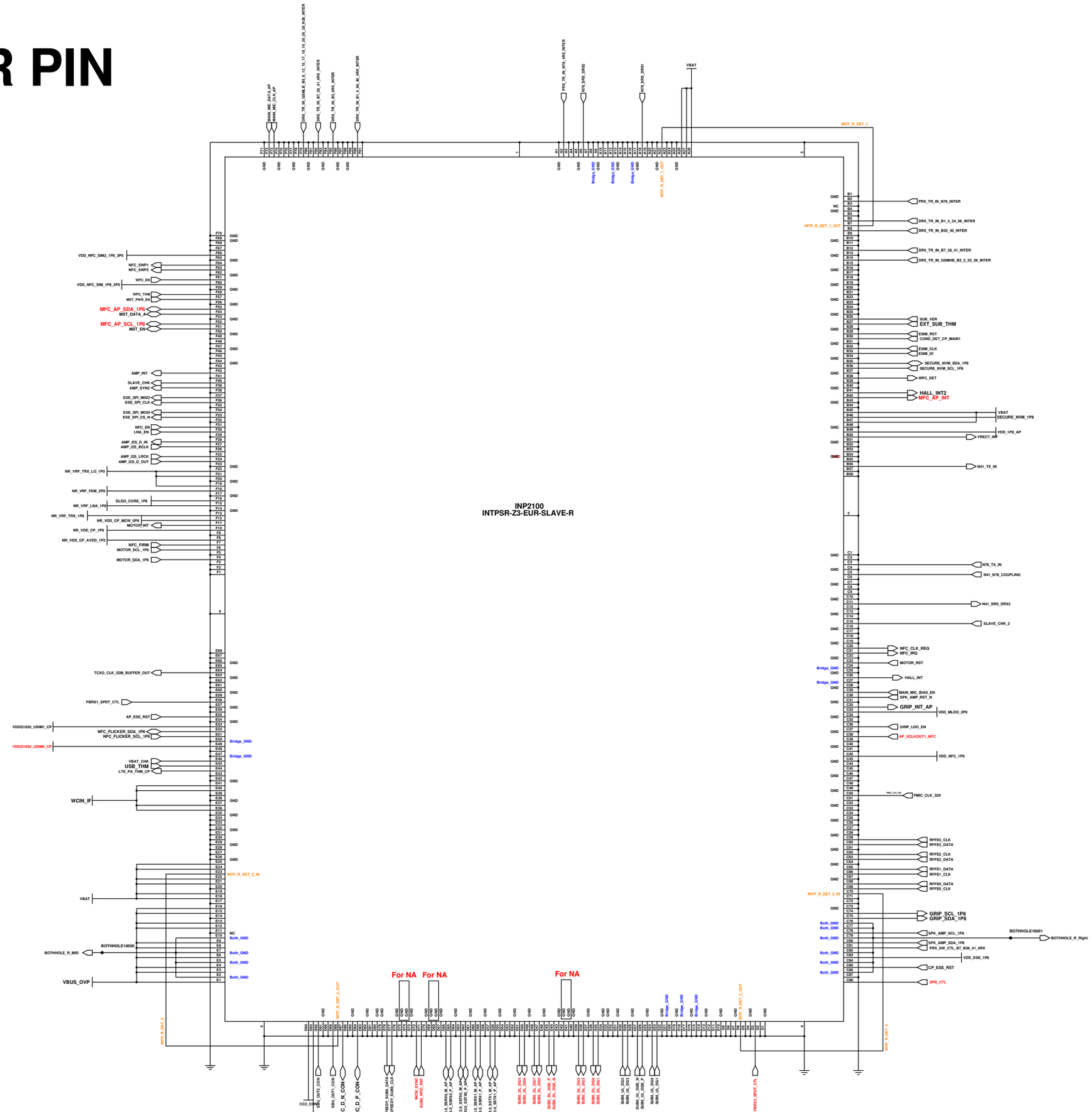

Engineer:			**INTERPOSER**
Drawn by:			
R&D CHK:		TITLE:	**Z3**
DOC CTRL CHK:			Size: A1
MFG ENGR CHK:			
QA CHK:	REV	Drawing Number:	Page: 6

Changed by: user115 | Date Changed: | Time Changed:

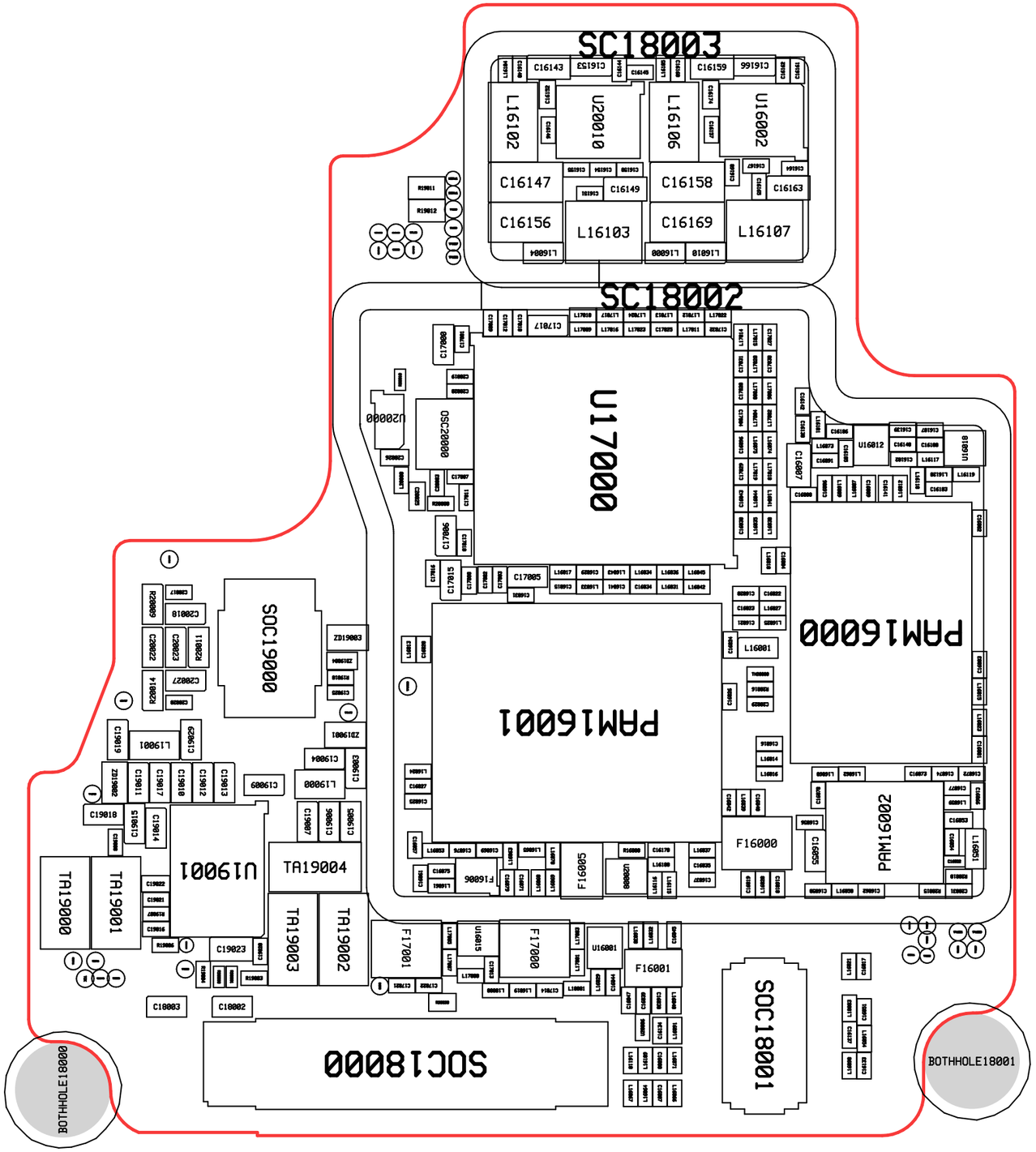
SC18003
C16143
C16153
C16159
C16166
L16102
U20010
L16106
U16002
C16147
C16149
C16158
C16163
C16156
L16103
C16169
L16107
SC18002
U17000
U20000
GSC20000
C17007
C17006
C17005
C17015
PAM16001
PAM16000
L16001
F16000
PAM16002
F16005
F16006
U16012
U16011
C16007
SOC19000
U19001
TA19000
TA19001
TA19004
TA19003
TA19002
F17001
U16015
F17000
U16001
F16001
SOC18000
SOC18001
BOTHHOLE18000
BOTHHOLE18001

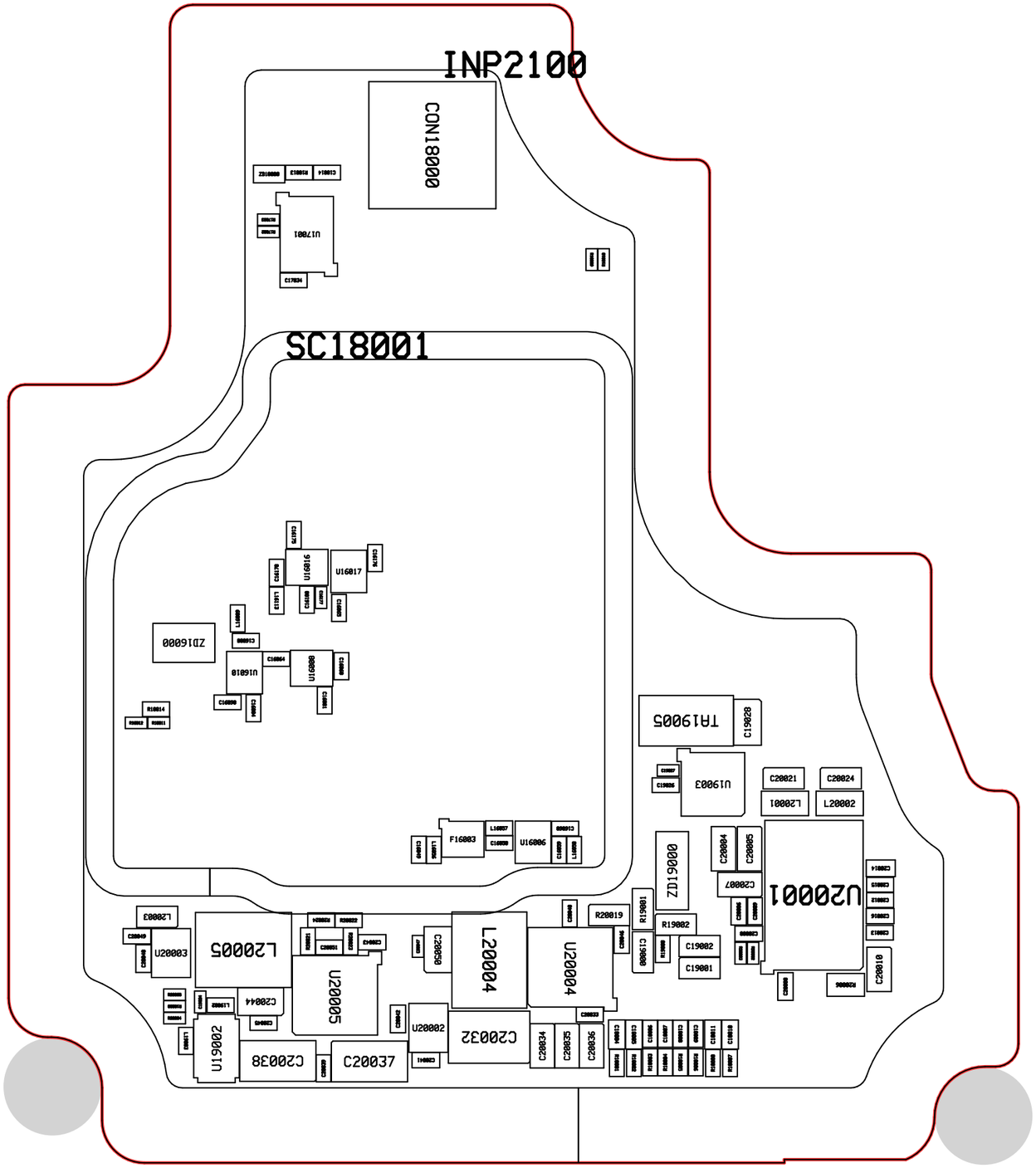
INP2100
CON18000
SC18001
U17001
U16019
U16017
ZD16000
U16018
U16006
F16003
TA19005
U19003
ZD19000
U20001
L20005
U20003
U20005
L20004
U20004
U20002
C20032
C20037
C20038
U19002

SAMSUNG CONFIDENTIAL
THIS DOCUMENT CONTAINS CONFIDENTIAL
PROPRIETARY INFORMATION THAT IS
SAMSUNG ELECTRONICS CO'S PROPERTY.
DO NOT DISCLOSE TO OR DUPLICATE FOR OTHERS
EXCEPT AS AUTHORIZED BY SAMSUNG.

SM-G988B_SLAVE_L_Rev0.5

2019.11.29

sheet01 : SENSOR, BATTERY CONN, 11ay+mmW CONN

sheet02 : DISPLAY

sheet03 : INTERPOSER

Engineer:			
Drawn by:			
R&D CHK:	TITLE:		Size: A1
DOC CTRL CHK:			
MFG ENGR CHK:			
QA CHK:	REV	Drawing Number:	Page: 1

Changed by: user01 | Date Changed: | Time Changed:

SAMSUNG CONFIDENTIAL
THIS DOCUMENT CONTAINS CONFIDENTIAL
PROPRIETARY INFORMATION THAT IS
SAMSUNG ELECTRONICS CO'S PROPERTY.
DO NOT DISCLOSE TO OR DUPLICATE FOR OTHERS
EXCEPT AS AUTHORIZED BY SAMSUNG.

SENSOR & BATTERY

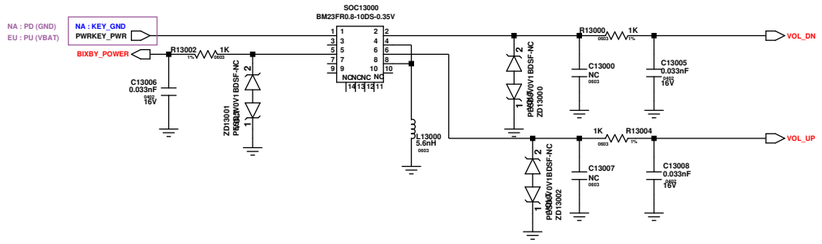

KEY : PWR, VOL DN, VOL UP

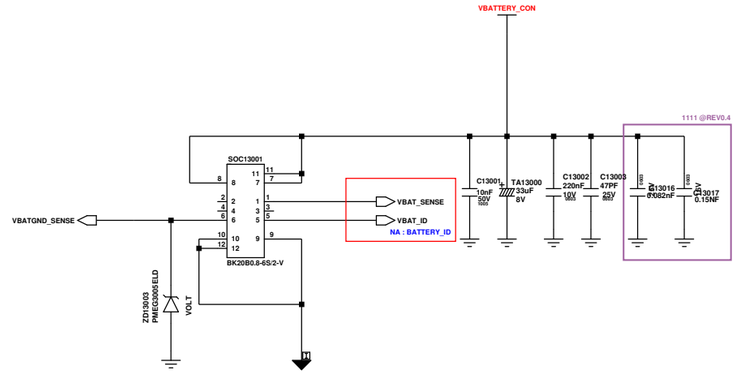

BATTERY CONNECTOR(45W) - P3 ONLY

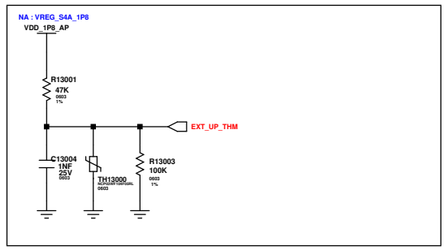

TEMP SENSING

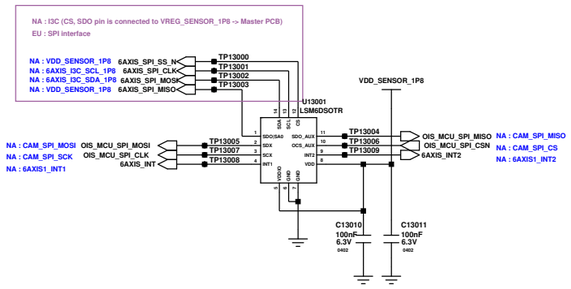

6 AXIS SENSOR (GYRO,ACCEL)

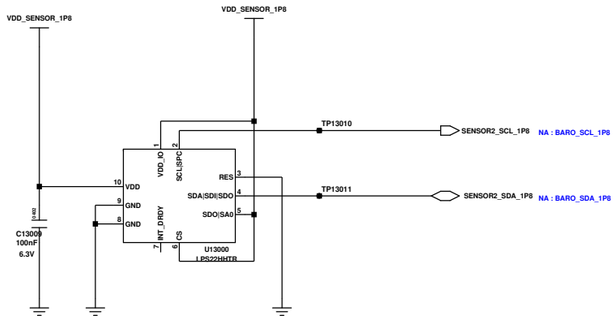

BAROMETER SENSOR

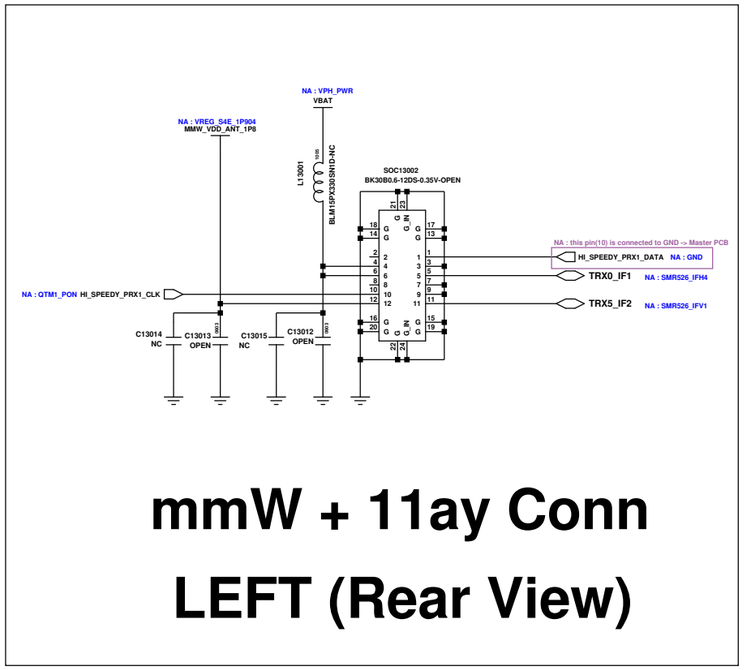

mmW + 11ay Conn LEFT (Rear View)

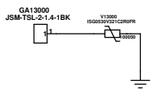

ESD PORON

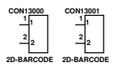

2D Barcode

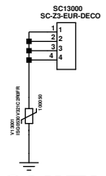

SHIELD CAN

SAMSUNG CONFIDENTIAL
THIS DOCUMENT CONTAINS CONFIDENTIAL
PROPRIETARY INFORMATION THAT IS
SAMSUNG ELECTRONICS CO'S PROPERTY.
DO NOT DISCLOSE TO OR DUPLICATE FOR OTHERS
EXCEPT AS AUTHORIZED BY SAMSUNG.

DISPLAY

DISPLAY PMIC

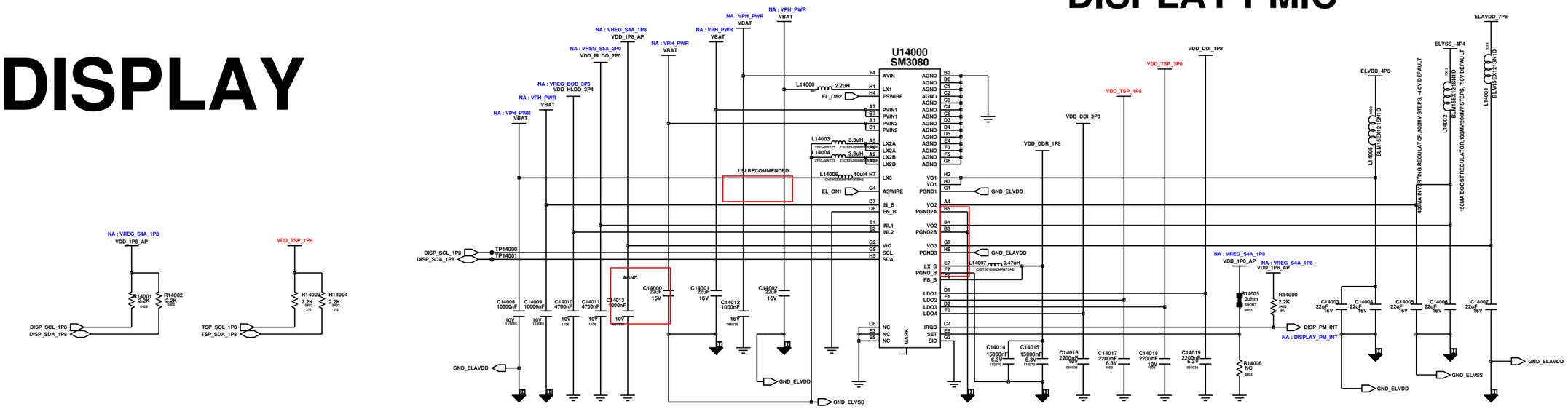

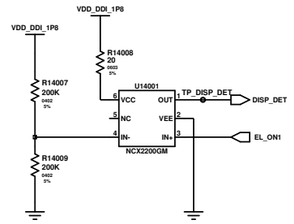

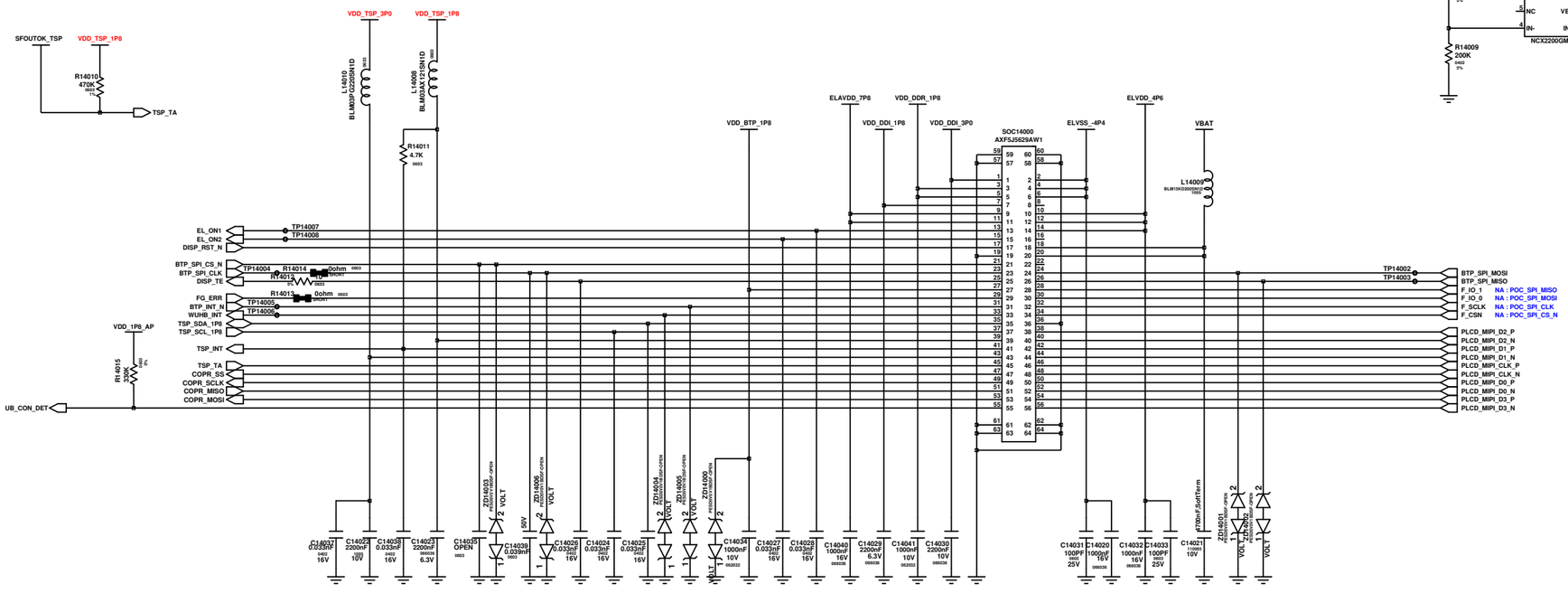

DISPLAY CONN

SAMSUNG CONFIDENTIAL
THIS DOCUMENT CONTAINS CONFIDENTIAL
PROPRIETARY INFORMATION THAT IS
SAMSUNG ELECTRONICS CO'S PROPERTY.
DO NOT DISCLOSE TO OR DUPLICATE FOR OTHERS
EXCEPT AS AUTHORIZED BY SAMSUNG.

SLAVE_L_PCB INTERPOSER PIN

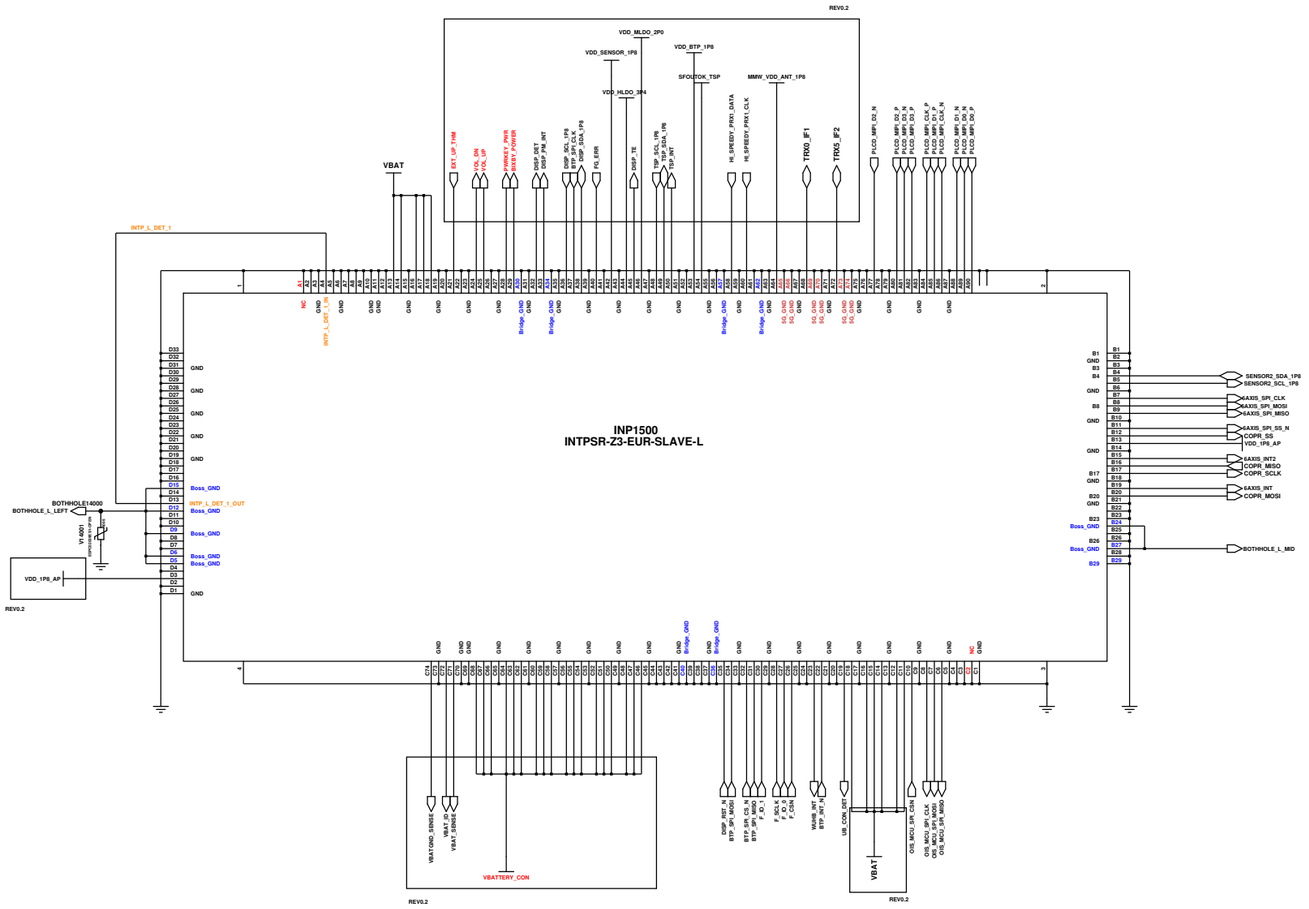

R15000 0ohm 1608 SMT SHORT **EUR/MEA**

R15001 0ohm 1608 SMT SHORT **KOR**

R15002 NC 1608 SMT SHORT **NA**

R15003 0ohm 1608 SMT SHORT **CHN**

Engineer:	CP & UFS MEMORY	
Drawn by:		
R&D CHK:	TITLE:	Size: A1
DOC CTRL CHK:	DREAM2_KANGCHEN	
MFG ENGR CHK:		
QA CHK:	REV	Drawing Number:
Page: 3		

Changed by: user118 | Date Changed: | Time Changed:

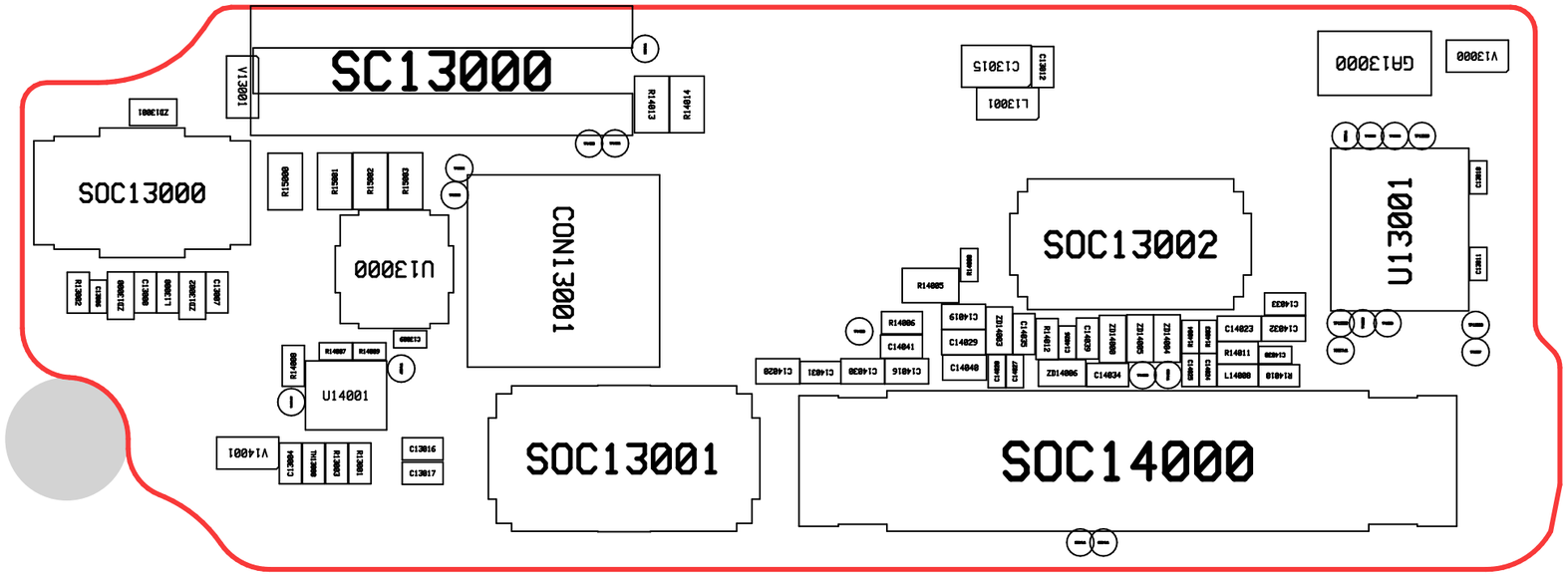
SC13000
SOC13000
U13000
CON13001
U14001
SOC13001
SOC13002
U13001
GA13000
SOC14000

INP1500

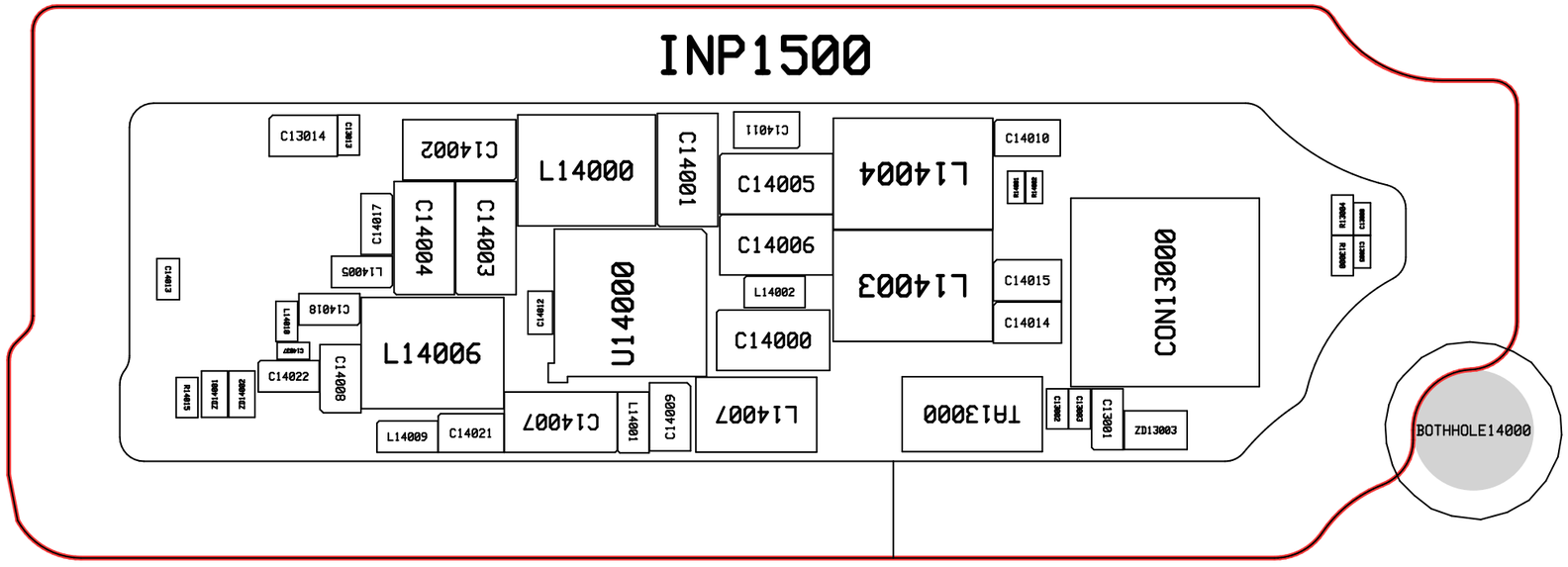
C13014
C13013
C14002
L14000
C14001
C14011
C14005
L14004
C14010
C14017
C14004
C14003
C14006
L14003
C14015
C14014
CON13000
L14005
C14013
C14018
L14018
C14012
U14000
L14002
C14000
L14006
C14008
C14022
R14015
L14017
C14007
L14009
C14021
L14001
C14009
L14007
TR13000
C13002
C13003
C13001
ZD13003
BOTHHOLE14000

SAMSUNG CONFIDENTIAL
THIS DOCUMENT CONTAINS CONFIDENTIAL
PROPRIETARY INFORMATION THAT IS
SAMSUNG ELECTRONICS CO'S PROPERTY.
DO NOT DISCLOSE TO OR DUPLICATE FOR OTHERS
EXCEPT AS AUTHORIZED BY SAMSUNG.

RF - MAIN_ANT

MAIN ANT1 <LB/MB TRX> (GSM, B1/2/3/4/5/8/12/13/17/18/19/20/25/26/28/32/66, TDD B34/39)

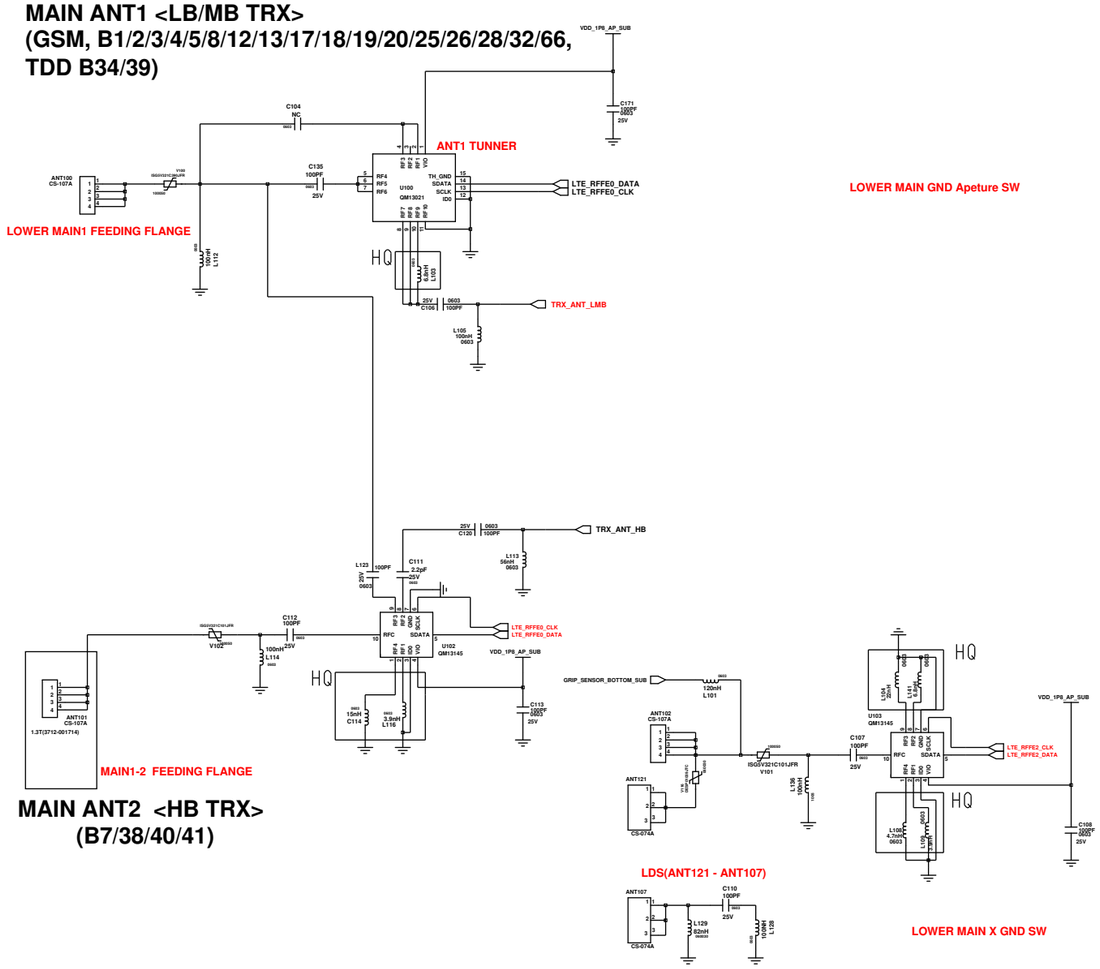

MAIN ANT2 <HB TRX> (B7/38/40/41)

MAIN ANT3 <HB 4RX> (B7/40/38_41/n78)

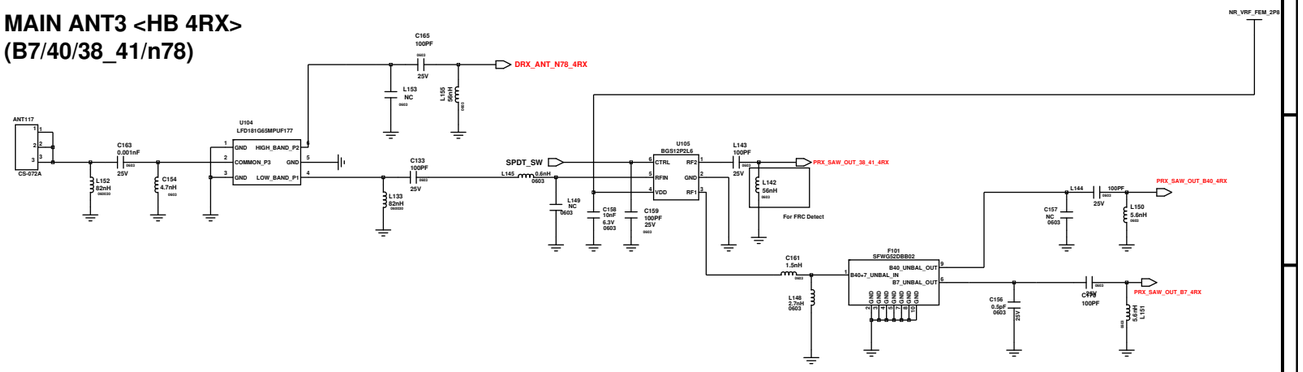

MAIN ANT4 <MB 4RX>

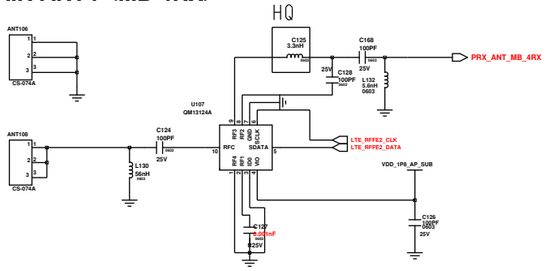

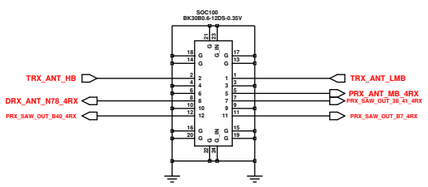

RF Ccnnector

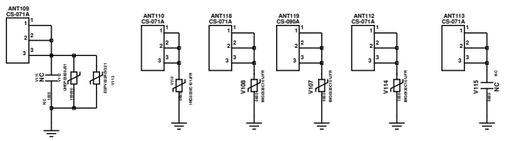

CCP

etc.

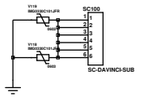

USB SHIELD CAN

USB SCREW

SCREW SUS

SAMSUNG CONFIDENTIAL
THIS DOCUMENT CONTAINS CONFIDENTIAL
PROPRIETARY INFORMATION THAT IS
SAMSUNG ELECTRONICS CO'S PROPERTY.
DO NOT DISCLOSE TO OR DUPLICATE FOR OTHERS
EXCEPT AS AUTHORIZED BY SAMSUNG.

BtoB CON

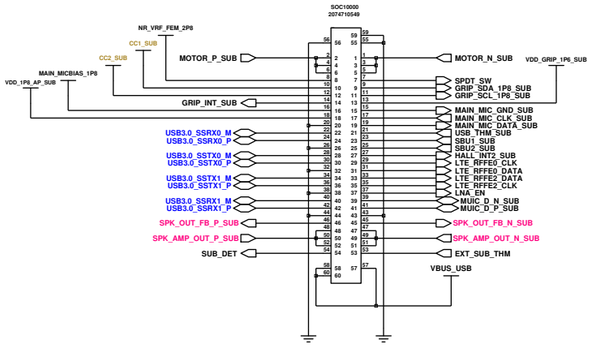

54 pin Connector

USB TYPE C

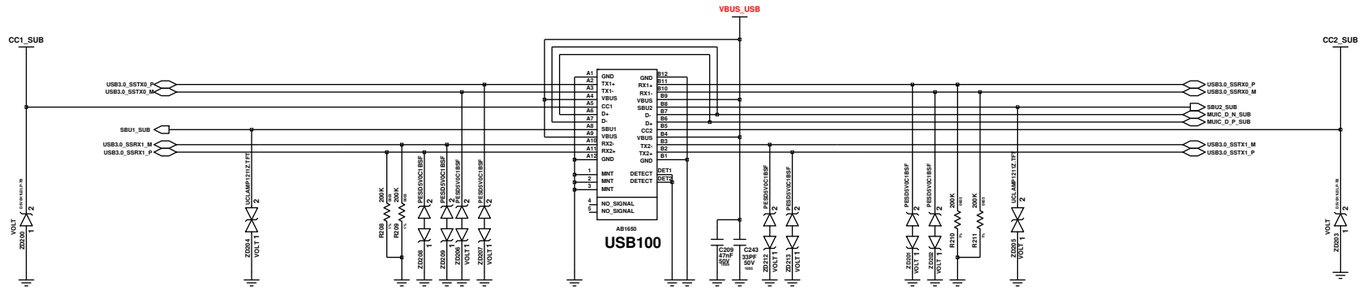

USB TYPE C Connector

AUDIO

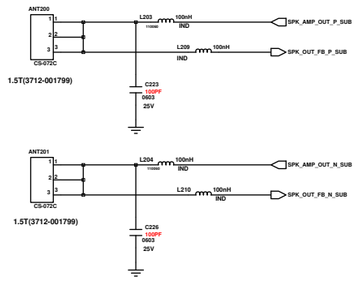

SPK CONTACT

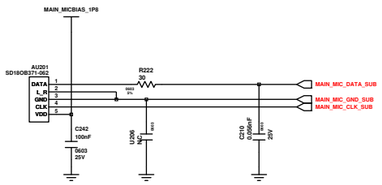

MAIN MIC

SENSOR

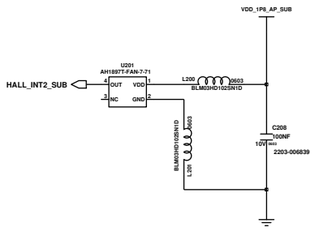

HALL SENSOR

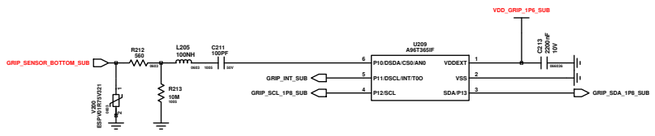

GRIP SENSOR

ETC.

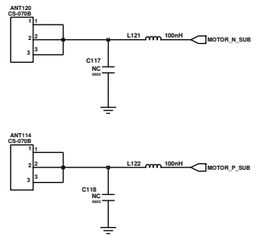

MOTOR

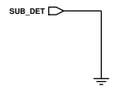

SUB DET (EU - 0)

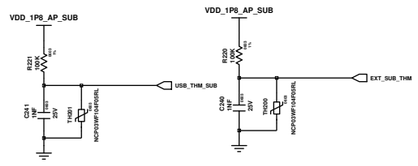

BATTERY THERMISTOR

Model :
Revision :
Manufacture Count :
Charge :
Contact :
Date :
Routing :
Resin :

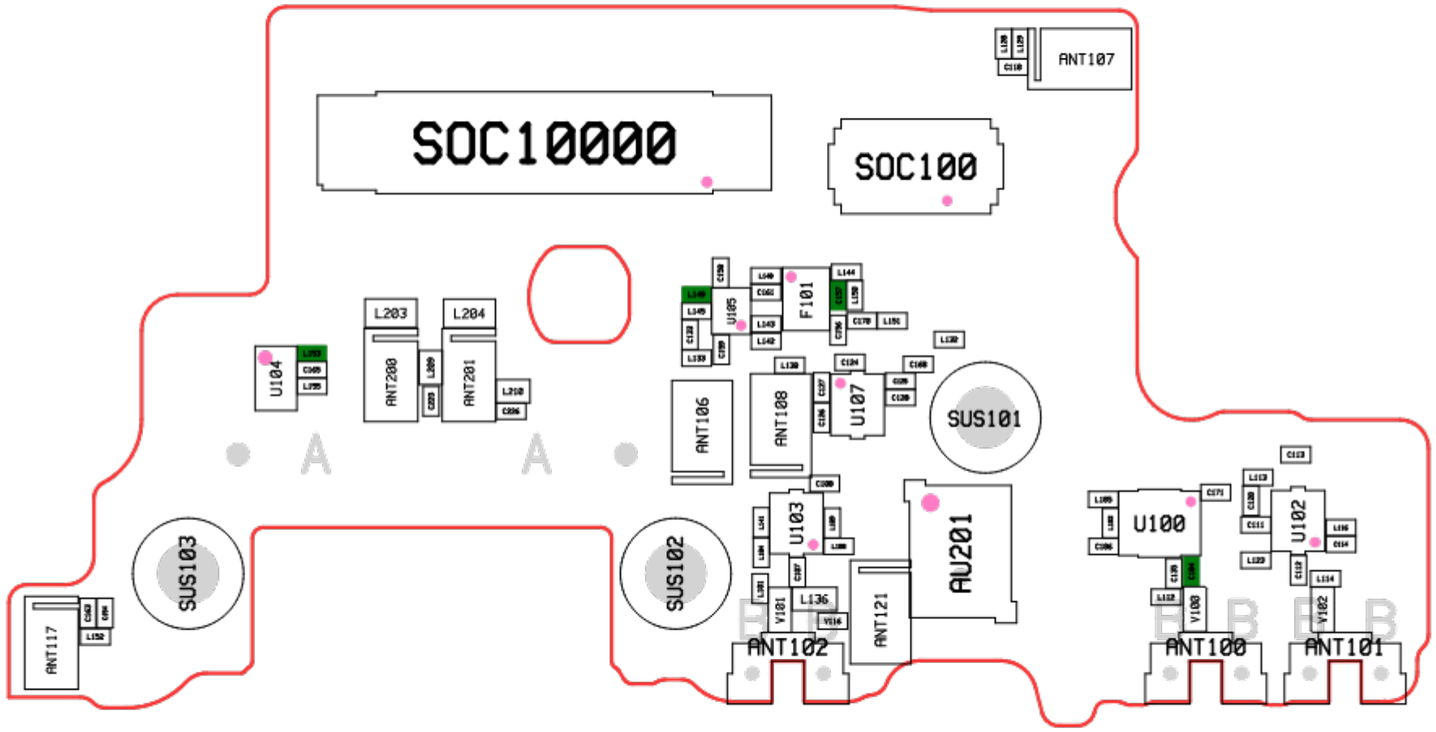
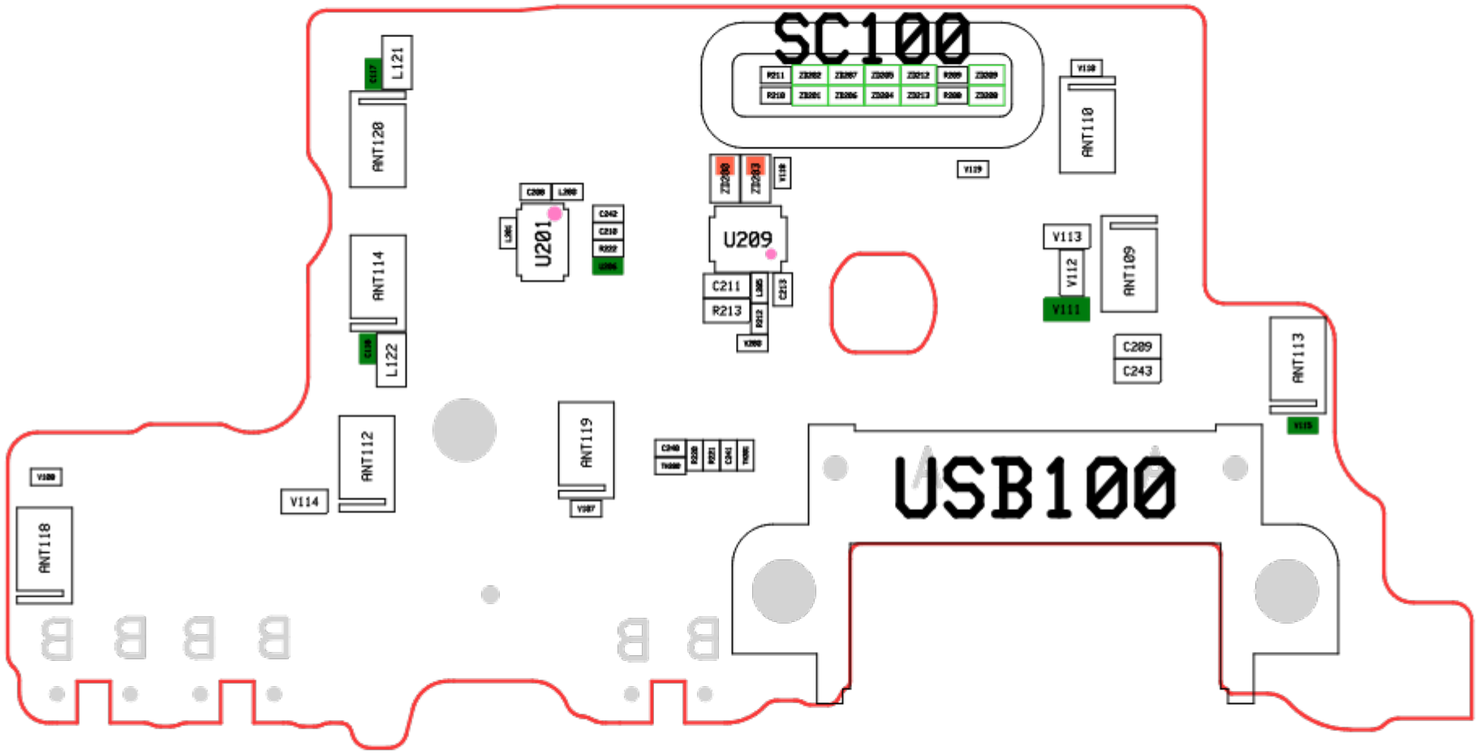
Model :
Revision :
Manufacture Count :
Charge :
Contact :
Date :
Routing :
Resin :